Ex floating electrode

**with trace heating
to prevent ice formation
at temperatures below 0°C**

**for detection of
liquid hydrocarbons on water surfaces**

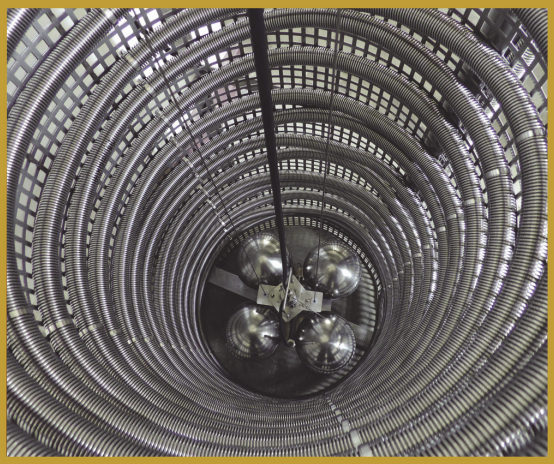

Jola Spezialschalter GmbH & Co. KG
Klostergartenstr. 11 • 67466 Lambrecht (Germany)
Tel. +49 6325 188-01 • Fax +49 6325 6396
contact@jola-info.de • www.jola-info.de

Ex leakage detector HE/SCHE 2/Ex (Variante ILS)-1G ⟨Ex⟩ II 2 G c IIB T4

Function and area of application:

The Ex floating electrode with trace heating to prevent the formation of ice at temperatures below 0°C, in the following called "Ex leakage detector HE/SCHE 2/Ex (Variante ILS)-1G ⟨Ex⟩ II 2 G c IIB T4", can be used to detect a layer of light liquid, such as diesel oil or gasoline (non-conductive liquids) on water (conductive liquid). This Ex leakage detector is particularly suitable for use in liquid collection sumps in catch basins of large containers in tank depots for flammable liquids.

The Ex leakage detector HE/SCHE 2/Ex (Variante ILS)-1G is the combination of an Ex floating electrode SCHE 2/Ex (Variante ILS)-1G and a heating unit.

Floating electrodes monitor a calm water surface for leaked diesel oil, gasoline or some other light layer-forming liquid that is not soluble in water. For this purpose, two electrode rods are permanently in contact with the water just below the water surface. An alternating current generated in the Ex electrode relay flows via the electrode rods and the conductive water. Following a gasoline spill, for example, the insulating gasoline layer that has formed on the water surface interrupts the flow of the current, and this triggers an alarm.

During the cold season, there is a risk that the water might freeze, which means the electrode rods are then "in ice". Ice is an insulator and interrupts the current flowing via the electrode rods and the water. This would trigger a false alarm.

In order to prevent this, the Ex leakage detector HE/SCHE 2/Ex (Variante ILS)-1G is equipped with a heating unit that automatically switches on at an outside temperature of approx. + 4°C and switches off again at a temperature of approx. + 11°C.

The floating electrode is fitted with an alarm-bridging contact for the eventuality that there is no water bed in hot summers, for example. This bridging contact remains active until the electrode rods have contact with water once again or the leakage liquid – diesel oil or gasoline, for example – has lifted the floating electrode out of the area in which the alarm-bridging contact is active.

The Ex leakage detector HE/SCHE 2/Ex (Variante ILS)-1G ⟨Ex⟩ II 2 G c IIB T4 consists of the following components:

- an Ex floating electrode SCHE 2/Ex (Variante ILS)-1G ⟨Ex⟩ II 2 G Ex ia IIB T6 Gb, version PURLF with anti-static PURLF cable (with conductive PUR sheath) and with an alarm-bridging contact for situations in which there is no water bed
- a mounting frame made of stainless steel and with an overall height of approx. 1,290 mm, and a protective cage made of perforated sheet stainless steel with a height of approx. 1,000 mm, a diameter of approx. 430 mm, an impact plate made of anti-static (conductive) polypropylene and guide ropes made of stainless steel to guide the aforementioned Ex floating electrode
- a cable-routing unit with 3 fixed rollers and a cable-straightening counter-weight which is encased in a stainless steel tube, coated with antistatic (conductive) polypropylene, and located outside the protective cage
- a self-limiting heating cable routed in a corrugated stainless steel tube in the protective cage with a heating power of 31 W/m at + 5°C
- an obligatory Ex terminal box OAK/SCHE/NR/2x1MΩ ⟨Ex⟩ II 2 G Ex ia IIC T6 Gb, protected at the rear and bottom by stainless steel sheet, to integrate the floating electrode rods in the potential equalisation system of the unit and for connection of an Ex electrode relay NR 5/Ex ⟨Ex⟩ I (M1) / II (1) GD [Ex ia Ma] I / [Ex ia Ga] IIC / [Ex ia Da] IIIC, Version A, installed outside the potentially explosive zone
- an Ex terminal box, protected at the rear and bottom by stainless steel sheet, for connection of the heating cable; the Ex terminal box is fitted with an Ex minithermostat with the characteristic ON at + 4°C and OFF at + 11°C
- a hook made of stainless steel to lift the floating electrode for servicing purposes

The Ex leakage detector HE/SCHE 2/Ex (Variante ILS)-1G must be connected to an Ex electrode relay NR 5/Ex ⟨Ex⟩ I (M1) / II (1) GD [Ex ia Ma] I / [Ex ia Ga] IIC / [Ex ia Da] IIIC, Version A installed outside the potentially explosive zone.

Option for level control or for triggering of an alarm when a specific liquid level is reached:

On request, the outside of the Ex leakage detector HE/SCHE 2/Ex (Variante ILS)-1G can be additionally fitted with magnetically controlled Ex immersion probes for level control or for triggering of an alarm.

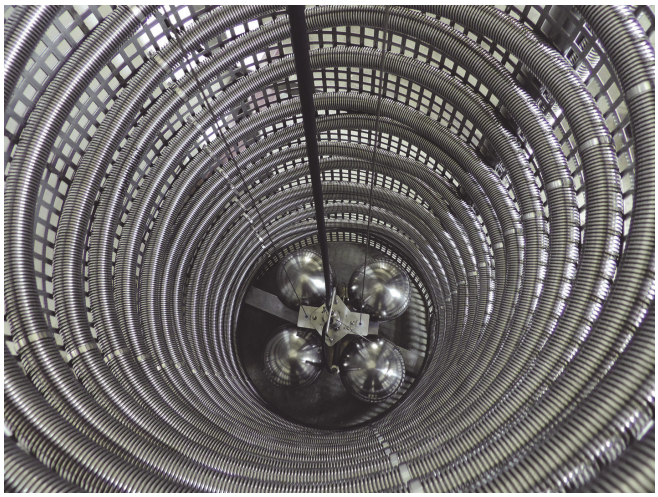

**view from above of
the self-limiting heating cable
routed in a corrugated stainless steel tube
and the Ex floating electrode**

Ex leakage detector HE/SCHE 2/Ex (Variante ILS)-1G ⟨Ex⟩ II 2 G c IIB T4

Technical data	HE/SCHE 2/Ex (Variante ILS)-1G ⟨Ex⟩ II 2 G c IIB T4
Areas of application	**zone 1 and 2 with gases in groups IIA and IIB**
Type examination certificate	**INERIS 16ATEX3001X**
Integrated Ex floating electrode	SCHE 2/Ex (Variante ILS)-1G ⟨Ex⟩ II 2 G Ex ia IIB T6 Gb, version PURLF with antistatic PURLF cable (with conductive PUR sheath) and with alarm-bridging contact for the eventuality that there is no water bed
Minimum required liquid level above the floor (in the case of water with a density of 1g/cm³)	190 mm
Connection of the Ex floating electrode	to an Ex electrode relay NR 5/Ex ⟨Ex⟩ I (M1) / II (1) GD [Ex ia Ma] I / [Ex ia Ga] IIC / [Ex ia Da] IIIC, Version A installed outside the potentially explosive zone
Supply voltage for the self-limiting heating cable	AC 230 V
Customer-side fusing	the self-limiting heating cable is to be connected to a customer-side AC 10 A fusing with type characteristic C by a qualified electrician of the operator outside the potentially explosive atmosphere
Self-limiting heating cable:	
• length	approx. 27 m
• heating power	31 W/m at + 5°C
• working range, limiting by Ex mini thermostat	ON at + 4°C, OFF at + 11°C
Temperature range	− 20°C to + 60°C **Down to which minus temperatures the prevention of ice formation can be guaranted depends on the volume and the level of water in the collection sump of the catch basin and the wind force.**
Pressure resistance	for pressureless applications only, to be used only under atmospheric conditions
Max. length of connecting cable between Ex leakage detector HE/SCHE and Ex electrode relay NR 5/Ex, Version A	see Installation, Operating and Maintenance Instructions (available on request)

Zone 1 or 2

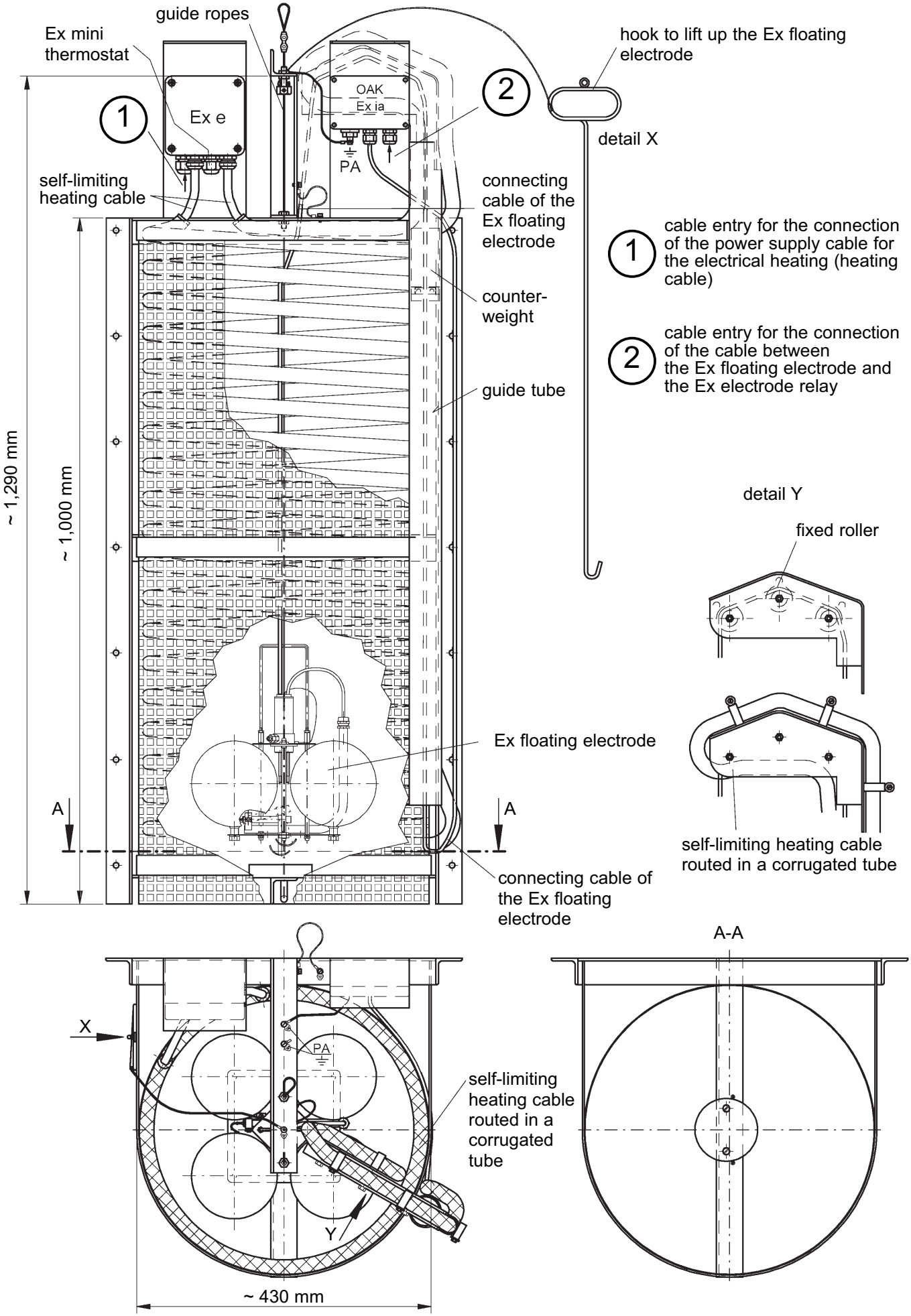

1 cable entry for the connection of the power supply cable for the electrical heating (heating cable)

2 cable entry for the connection of the cable between the Ex floating electrode and the Ex electrode relay

Magnetically operated Ex immersion probes can optionally be added to the Ex leakage detector HE/SCHE 2/Ex (Variante ILS)-1G for level control or alarm signalling

TSR/FED/E8/Variante 0/Ex-1G ⟨Ex⟩ II 2 G Ex ia IIC T6 Gb immersion probe

Technical data	TSR/FED/E8/Variante 0/Ex-1G ⟨Ex⟩ II 2 G Ex ia IIC T6 Gb
Application	**for use in intrinsically safe circuits in potentially explosive atmospheres zone 1 and 2** **EC type examination certificate INERIS 03ATEX0163X**
Probe tube:	
• material	stainless steel 316 Ti
• diameter	14 mm
• length	according to customer's specifications, measured from nipple sealing surface
Screw-in nipple	G½, on request: special screw-in nipple to make the Ex immersion probe height-adjustable
Float	stainless steel 316 Ti, 72 mm Ø, for use in media with a specific gravity ≥ 0.70 g/cm³
Cable entry	nickel-plated brass, on request stainless steel, protection class IP65
Connecting cable	PVC, other connecting cable on request
Ex connection box mounted on the Ex leakage detector, for the connection of the Ex immersion probe	execution depending on the number of contacts of the Ex immersion probe, Ex connection box for use with several Ex immersion probes on request
Mounting orientation	vertical
Temperature range	– 20°C to + 60°C
Pressure resistance	for pressureless applications only, use only under atmospheric conditions
Contacts	reed contacts: make (NO), break (NC) or changeover (OC) contacts
Max. number of contacts:	
• OC	4
• NO or NC	4

Min. distances to be observed for the contacts (based on liquids with a specific gravity of 1 g/cm³):			
from the nipple sealing surface to the upper contact	between contacts when using		from the lower contact to the end of the probe tube (when float is falling)
	1 float	2 floats	
80 mm	80 mm	100 mm	55 mm

The above equipment will be manufactured in accordance with your specifications.

Zone 1 or 2

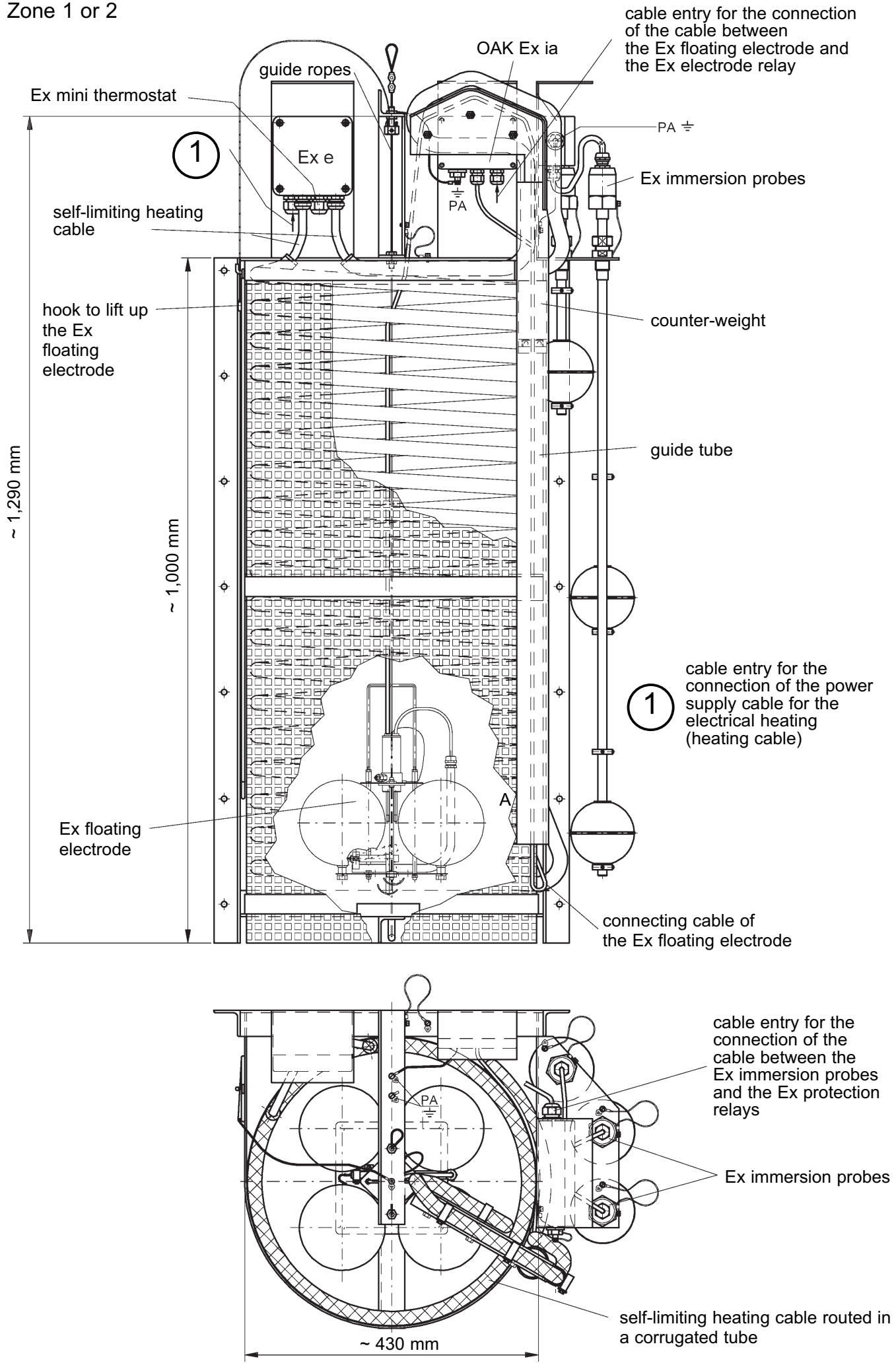
cable entry for the connection of the cable between the Ex floating electrode and the Ex electrode relay
OAK Ex ia
guide ropes
Ex mini thermostat
PA
1
Ex e
Ex immersion probes
PA
self-limiting heating cable
hook to lift up the Ex floating electrode
counter-weight
guide tube
~ 1,290 mm
~ 1,000 mm
cable entry for the connection of the power supply cable for the electrical heating (heating cable)
1
A
Ex floating electrode
connecting cable of the Ex floating electrode
cable entry for the connection of the cable between the Ex immersion probes and the Ex protection relays
PA
Ex immersion probes
self-limiting heating cable routed in a corrugated tube
~ 430 mm

NR 5/Ex ⟨Ex⟩ I (M1) / II (1) GD [Ex ia Ma] I / [Ex ia Ga] IIC / [Ex ia Da] IIIC, Version A electrode relay

Ex electrode relay for U-bar mounting or surface mounting, with connection terminals on top of the housing and with 2 built-in LEDs for signalling the respective switching status.

The unit is designed for switch cabinet mounting or installation in a suitable protective housing outside potentially explosive atmospheres and may therefore only be mounted / installed in these locations. It is suitable for use in clean environments only.

The **NR 5/Ex ⟨Ex⟩ I (M1) / II (1) GD [Ex ia Ma] I / [Ex ia Ga] IIC / [Ex ia Da] IIIC, Version A** electrode relay is designed to transmit control commands from an intrinsically safe control current circuit to a non-intrinsically safe active current circuit. **It must be installed outside potentially explosive areas in compliance with the relevant standards and regulations.**

Ex approved conductive electrodes, such as the Ex floating electrodes, may be used in the intrinsically safe control current circuit. **The different application possibilities and the special conditions for safe use are described in the corresponding Installation, Operating and Maintenance Instructions (sent on request).**

The design of the Ex electrode relay is based **on the quiescent current principle**; in other words, an alarm signal is given if there is no conductive connection between the two connected electrode rods of the Ex floating electrode; the output contact of the NR 5/Ex, Version A electrode relay also reverts to alarm status if there is a supply voltage failure.

In standby status (unit is supplied with voltage and electrode rods are in a conductive liquid), the potential-free changeover contact in the output is in activated condition and the green LED lights.

In the event of an alarm, the potential-free changeover contact in the output is in non activated condition (quiescent state) and the red LED lights.

Dimensions (*in mm*)

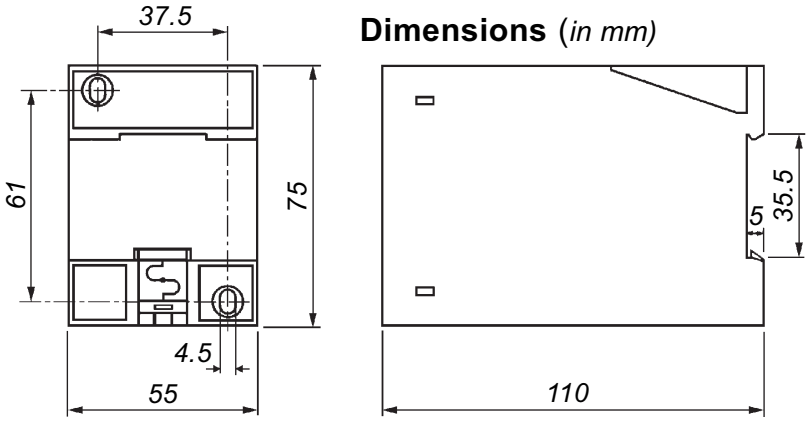

Position of output contact of the NR 5/Ex, Version A electrode relay

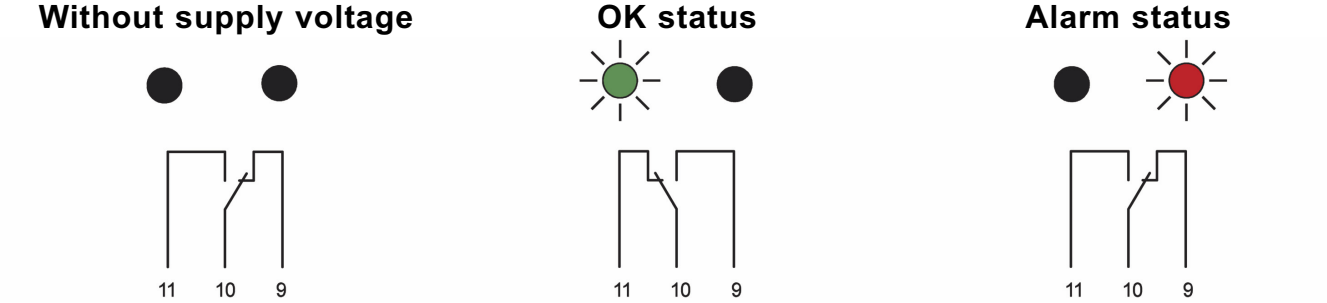

LEDs dark –
output relay not energised

green LED lights –
output relay energised

red LED lights –
output relay not energised

Technical data	NR 5/Ex ⟨Ex⟩ I (M1) / II (1) GD [Ex ia Ma] I / [Ex ia Ga] IIC / [Ex ia Da] IIIC, Version A
Alternative supply voltages (terminals 15 and 16)	AC 230 V (supplied if no other supply voltage is specified in the order) or AC 240 V or AC 115 V or AC 110 V or AC 24 V
Power input	approx. 3 VA
Electrode circuit (terminals 1 and 7)	2 terminals (under safety extra low voltage SELV), acting on one output relay
No-load voltage	3 V_{eff} ⊓⊔ 10 Hz (safety extra low voltage SELV)
Short-circuit current	max. 0.5 mA_{eff}
Response sensitivity	approx. 30 kΩ or approx. 33 µS (conductance); on request with higher response sensitivity for less conductive rain water, e.g. during long lasting rainfalls: approx. 200 kΩ or approx. 5 µS (conductance)
Controlled circuit (terminals 9, 10, 11)	1 single-pole potential-free changeover contact, based on the quiescent current principle
Switching status indicators	• via a green LED: ligths = OK status, output relay energised • via a red LED: lights = alarm status, output relay not energised
Switching voltage	max. AC 250 V
Switching current	max. AC 4 A
Switching capacity	max. 100 VA
Housing	insulating material, 75 x 55 x 110 mm (dimensions see page 39-3-7)
Connection	terminals on top of housing
Protection class	IP20
Mounting	clip attachment for U-bar to DIN 46 277 and EN 50 022 or fastening via two boreholes
Mounting orientation	any
Temperature range	– 20°C to + 60°C
Max. cable length between electrode relay NR 5/Ex, Version A and Ex floating electrode	see Installation, Operating and Maintenance Instructions (sent on request)
EC type examination certificate	INERIS 03ATEX0151
EMC	for interference emission in accordance with the appliance-specific requirements for households, business and commerce as well as small companies, and for interference immunity in accordance with the appliance-specific requirements for industrial companies

Connection diagram for the Ex floating electrode

POTENTIALLY EXPLOSIVE ATMOSPHERE zone 1 or 2

NON-POTENTIALLY EXPLOSIVE ATMOSPHERE

cable entry for the connection of the power supply cable for the electrical heating (heating cable)

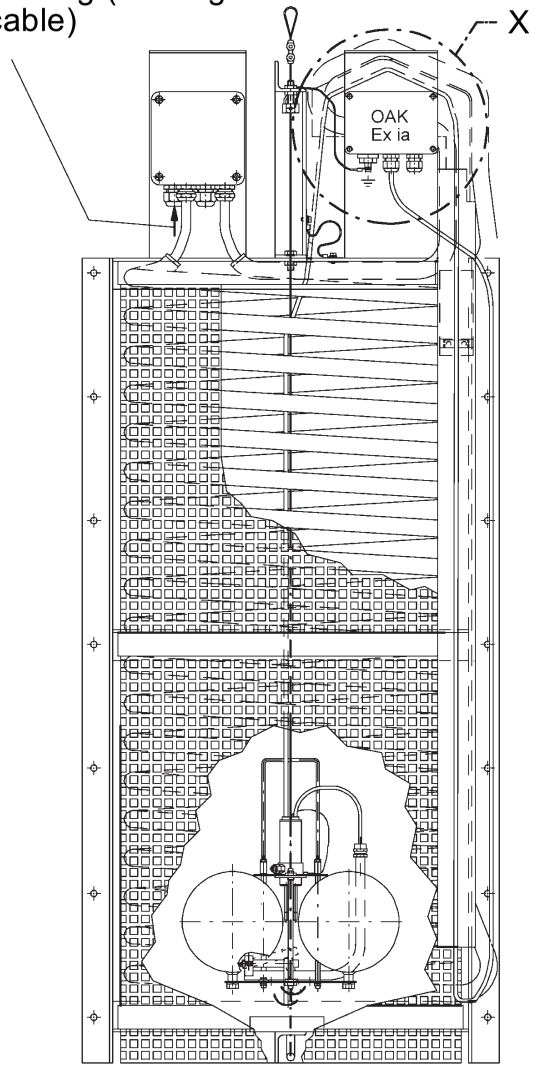

obligatory Ex connection box
OAK/SCHE/NR/2x1MΩ

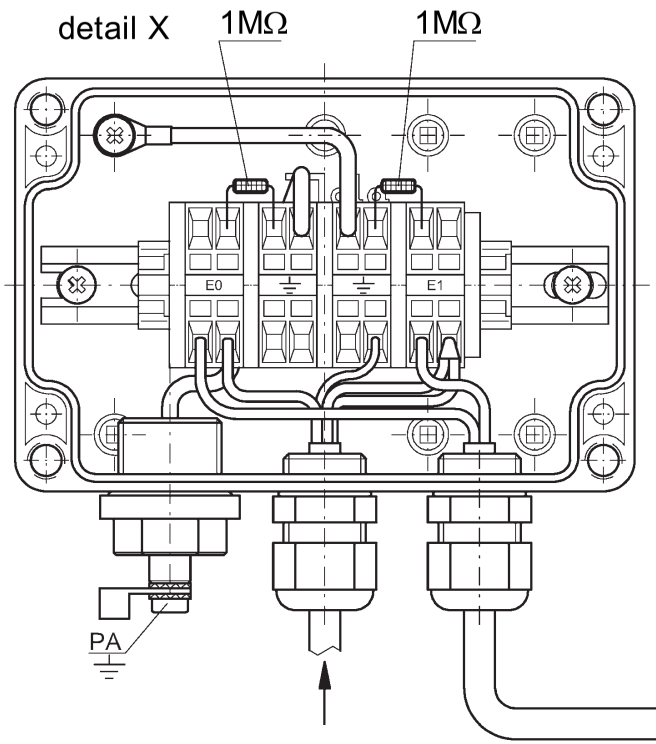

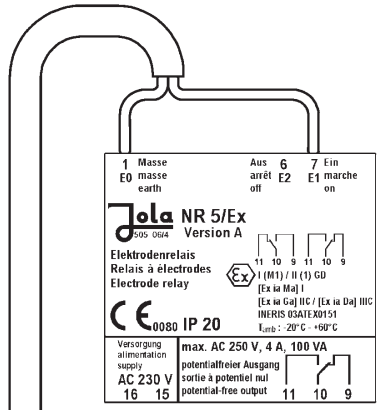

connecting cable of the Ex floating electrode

Connection diagram for the self-limiting heating cable

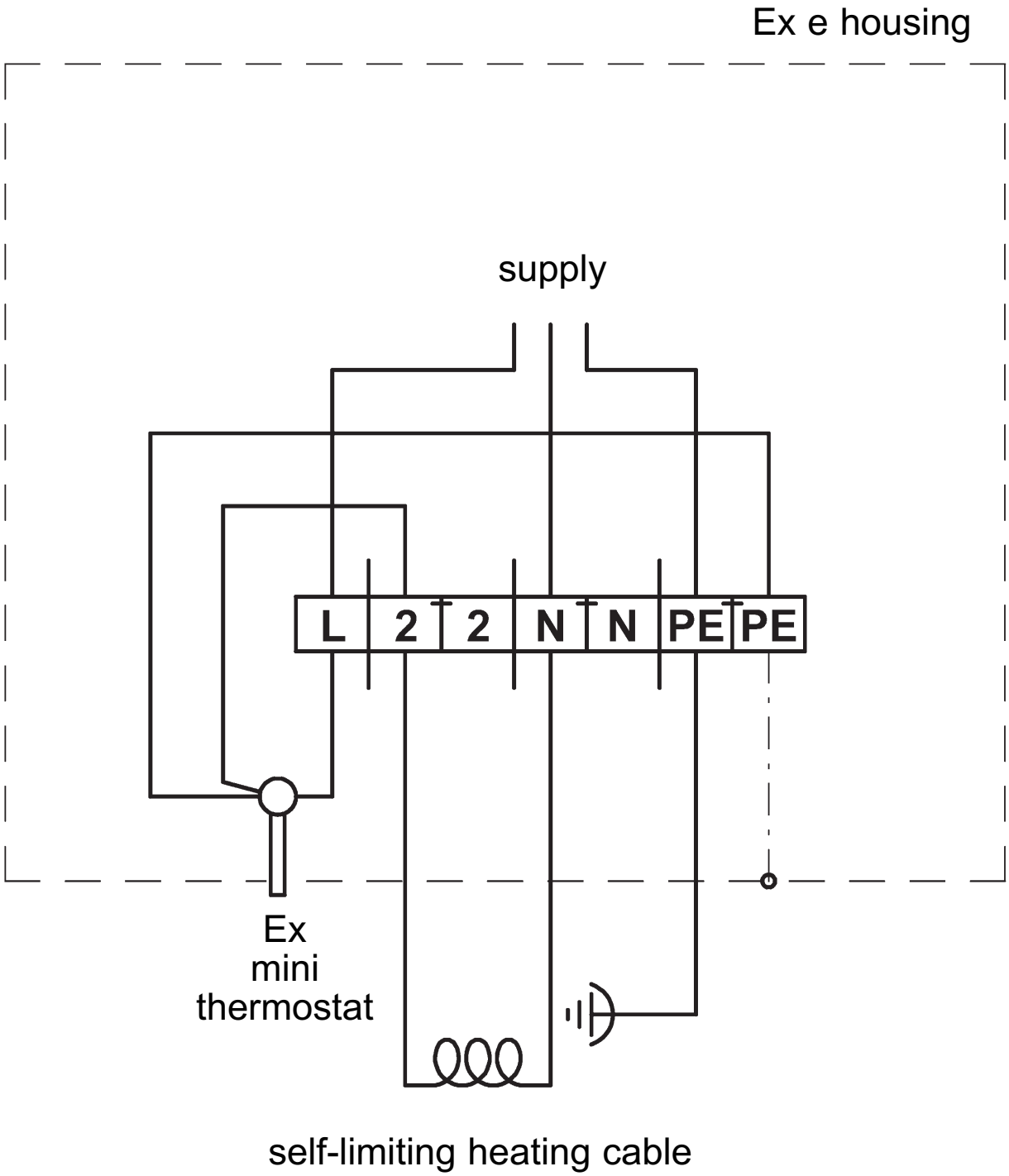

Application example:
Installation of the Ex leakage detector HE/SCHE 2/Ex (Variante ILS)-1G in the liquid collection sump in a catch basin

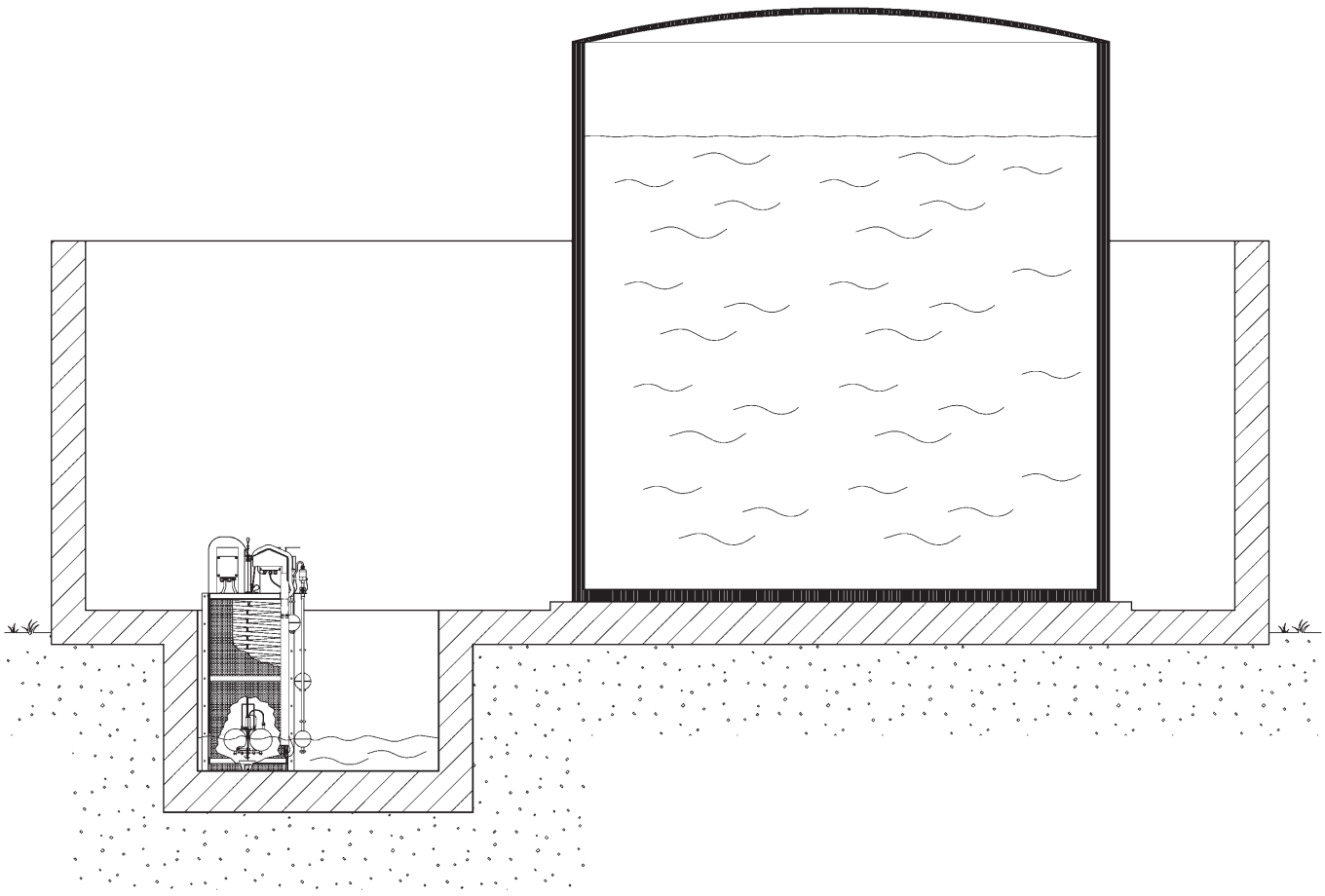

Jola Spezialschalter GmbH & Co. KG sells only business-to-business (B2B).

The units described in this documentation may only be installed, connected, started up, serviced and replaced by suitably qualified personnel!

Subject to deviations from the diagrams and technical data.

The details in this brochure are product specification descriptions and do not constitute assured properties in the legal sense.