Floating electrodes

for the detection of oil on water surfaces

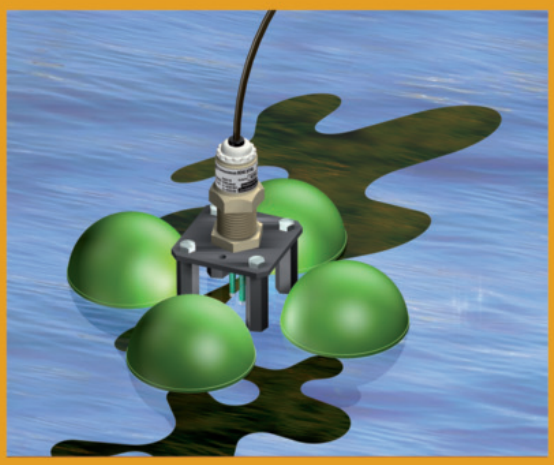

Jola Spezialschalter GmbH & Co. KG
Klostergartenstr. 11 • 67466 Lambrecht (Germany)
Tel. +49 6325 188-01 • Fax +49 6325 6396
contact@jola-info.de • www.jola-info.de

The units described in this documentation may only be installed, connected, started up, serviced and replaced by suitably qualified personnel!

Subject to deviations from the diagrams and technical data.

The details in this brochure are product specification descriptions and do not constitute assured properties in the legal sense.

Floating electrodes

Table of contents **Page**

Floating electrodes

Areas of application

Floating electrodes are designed for use only **in pits, reservoirs, pump shafts, separator plants for light liquids or similar areas**.

It should be noted that floating electrodes can only be used **to detect the presence of a layer of a light liquid which is not soluble in water and which is not conductive on a surface of water (or another conductive liquid which has a higher specific density than the respective light liquid) which is sufficiently calm to allow phase formation.**

The precondition for proper functioning of the floating electrodes is, namely, **that clear separation between the heavy conductive liquid and the lighter non-conductive liquid to be detected** is possible in the various locations, such as pits, reservoirs, pump shafts, separator plants or similar.

In analogy to DIN 1999-100, DIN EN 858-1 and DIN EN 858-2 (separators for light liquids), the separation of light liquids which are insoluble in water and which are non-saponifiable, such as diesel and fuel oils as well as other oils of mineral origin with densities up to max. 0.95 g/cm³, is proven.

Functioning of the floating electrodes is therefore ensured **when used in closed surveillance areas without discharges (pits, reservoirs, pump shafts) and in separator plants in compliance with DIN 1999-100, DIN EN 858-1 and DIN EN 858-2** for the listed media. Application tests have shown that an alarm is activated if non-conductive liquids have formed layers between approx. 3 mm and 10 mm on the heavy liquid (e.g. water) to be monitored.

For all other application areas, a test must be performed prior to the desired use to ascertain whether the phase formation and minimum layer thickness of the non-conductive liquid required for exact functioning can be achieved in the operating conditions in question (such as flow parameters, possible dwell times of the light liquid to be detected in the application site etc.).

In case of doubt, the installation conditions should be assessed by an expert from JOLA or from a supervisory organisation to determine whether the use of the floating electrodes is feasible.

It should also be noted that, although the floating electrodes can generally be used in the respective temperature ranges specified in the brochure, **it is absolutely essential that both media are present in light liquid form** to ensure proper functioning (which, for example, is only assured with water with a temperature above 0° C).

If temperatures below 0°C are expected, we recommend the installation of a floating electrode with trace heating available from JOLA.

Design

The SCHE … floating electrodes are made up of an upper section and a lower section. The upper section consists of an electrode holder and a rod electrode (whose position can be adjusted in the electrode holder) with one control electrode and one ground electrode for alarm signalling. Alternatively, the rod electrode is also available with two control electrodes and one ground electrode for pre-alarm and main alarm. The lower section of the floating electrode is made up of four floats and a stabilizer plate.

Mode of operation and adjustment

(Description based on floating electrodes with 2 electrode rods)

The SCHE … floating electrode normally floats on a conductive liquid, such as water. It is connected to an electrode relay which supplies it with a low safety voltage. The height of the rod electrode is set in such a way that the two electrode rod tips are permanently underwater. Depending on the movement of the surface of the liquid, the rod electrode should be set further up or down. Although the two electrode rod tips should be permanently underwater, they should only just be underwater, so that when a conductive liquid (water) is overlaid by a non-conductive liquid (such as oil), a thin layer of the non-conductive liquid (oil) is sufficient to lift the electrode rod tips of the rod electrode from the conductive water layer into the non-conductive oil layer, to thus interrupt the current flowing from the electrode relay via the rod electrode, and therefore to activate an alarm.

If, for example, oil flows onto a still water surface following a leak, exact setting of the rod electrode will ensure that an oil layer of only approx. 3 to 10 mm thickness is sufficient to interrupt the control current flowing via the rod electrode and activate an alarm.

To ensure functionning of the SCHE … floating electrode, there must be a minimum liquid level above the floor (see technical data of the individual floating electrodes). If this condition is not fulfilled, the two electrode rod tips will no longer be underwater – in other words, they will not be electrically bridged by a conductive liquid. This will lead to normally undesired alarm activation via the connected electrode relay. The only model with an alarm bridging contact for this eventuality is the SCHE 2/E (ILS variant).

A SCHE … floating electrode fitted with 2 electrode rods is designed for connection to an **electrode relay ESA 2, ESA 2/G** or **NR 3 A.**

The above mentioned electrode relays are fitted with a response sensitivity of approx. 30 kΩ (approx. 33 µS). For applications during long lasting rainfalls which cause a decrease of conductivity, the response sensitivity might not be sufficient. In this case, the electrode relays can be fitted with a higher response sensitivity of approx. 200 kΩ (approx. 5 µS).

SCHE 2/T/KL

Floating electrodes

Application example

Use of a floating electrode in an underground water retention basin of an oil-using fabrication plant

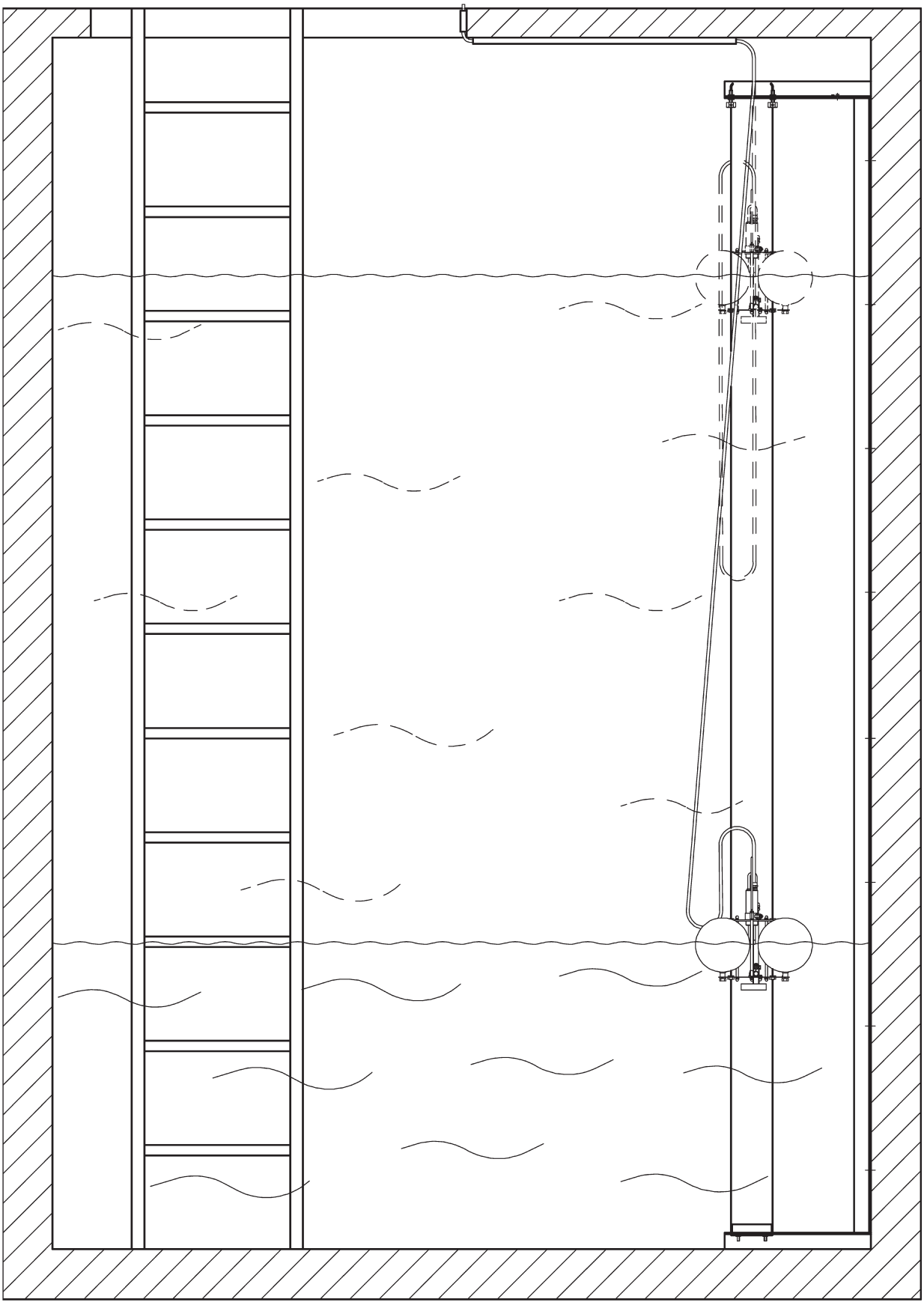

Floating electrodes

Type overview

Types	Main differentiation features	Electrode holder, stabilizer plate and brackets	Floats	Connec-ting cable	Page
SCHE 2/T/GR	**2** electrode rods for **1** alarm (connected to **1** electrode relay)	**PVC**	**PP, approx. 85 mm Ø**	**TPK**	39-1-7
SCHE 2/T/KL		**PP**			39-1-7
SCHE 2/E		**stainless steel 316 Ti or other stainless steel**	**stainless steel 316 Ti, approx. 95 mm Ø**	**PTFE**	39-1-7
SCHE 3/E	**3** electrode rods for **2** alarms (connected to **2** electrode relays)	**stainless steel 316 Ti or other stainless steel**	**stainless steel 316 Ti, approx. 95 mm Ø**	**PTFE**	39-1-11
SCHE 2/E (ILS variant)	**2** electrode rods for **1** alarm (connected to **1** electrode relay) **with alarm bridging contact for the event that no or insufficient liquid is present to ensure functioning of the floating electrode**	**stainless steel 316 Ti or other stainless steel**	**stainless steel 316 Ti, approx. 130 mm Ø**	**PTFE**	39-1-13

SCHE 2/.. floating electrodes

conductive electrodes with 2 detection rods for signalling 1 alarm

Technical data	SCHE 2/T/GR	SCHE 2/T/KL	SCHE 2/E
Design	1 control electrode and 1 ground electrode		
Sensitive elements	2 detection rods made of stainless steel 316 Ti, 4 mm Ø, covered with shrinkdown tubing made of polyolefine | PVDF or PTFE length: approx. 45 mm, other lengths on request		
Rod electrode head	PP, | stainless steel 316 Ti, protection class IP67		
Electrical connection	cable made of TPK, | cable made of PTFE, potted in electrode head, length: 2 m, on request: • other cable • other length		
Electrode holder, stabilizer plate and brackets	PVC	PP	stainless steel 316 Ti or other stainless steel
Floats	4 units made of PP, approx. 85 mm Ø | stainless steel 316 Ti, approx. 95 mm Ø		
Min. level of conductive liquid above the floor to ensure functioning of the floating electrode (with d = 1 g/cm³)	80 mm,	75 mm,	85 mm,
	it is therefore recommended to install the floating electrode in a liquid collection shaft which should be as small as possible		
Temperature range	+ 8°C to + 60°C		– 20°C to + 90°C
Pressure resistance	for pressureless applications only, use only under atmospheric conditions		
Max. length of connecting cable	1,000 between floating electrode and electrode relay		

SCHE 2/T/GR

SCHE 2/T/KL

SCHE 2/E

Dimensions (*in mm*)

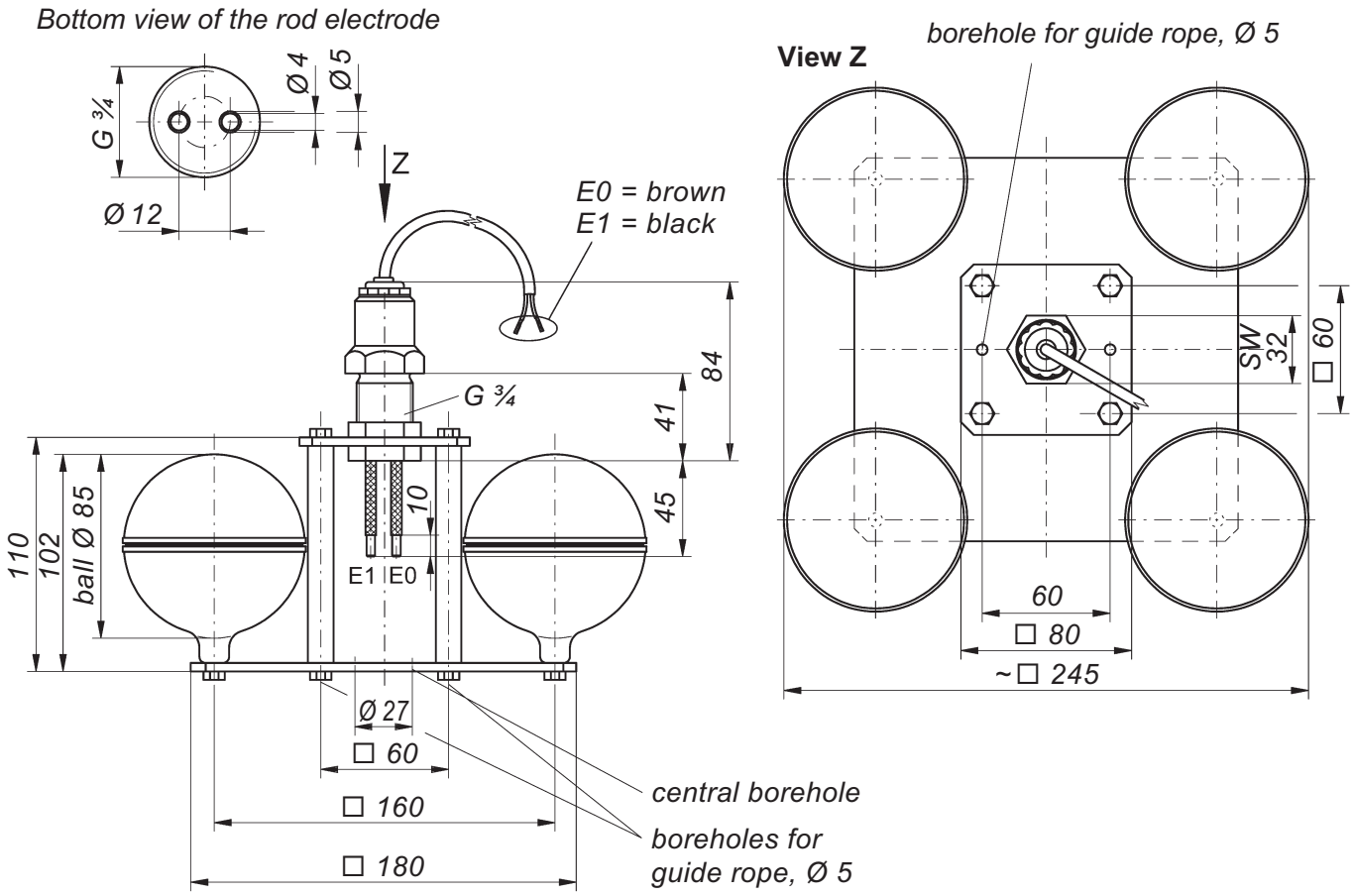

SCHE 2/T/GR

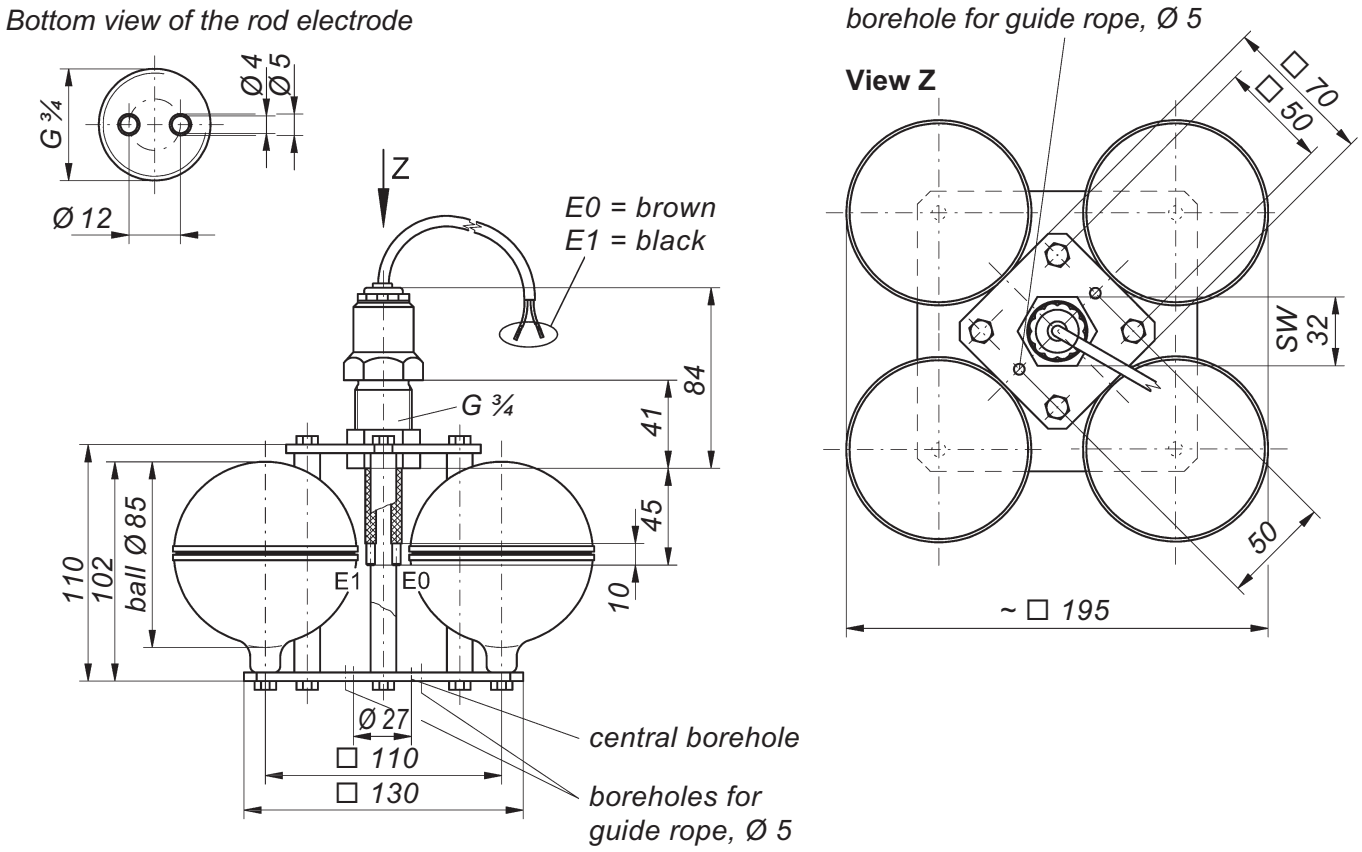

SCHE 2/T/KL

Dimensions (*in mm*)

Bottom view of the rod electrode

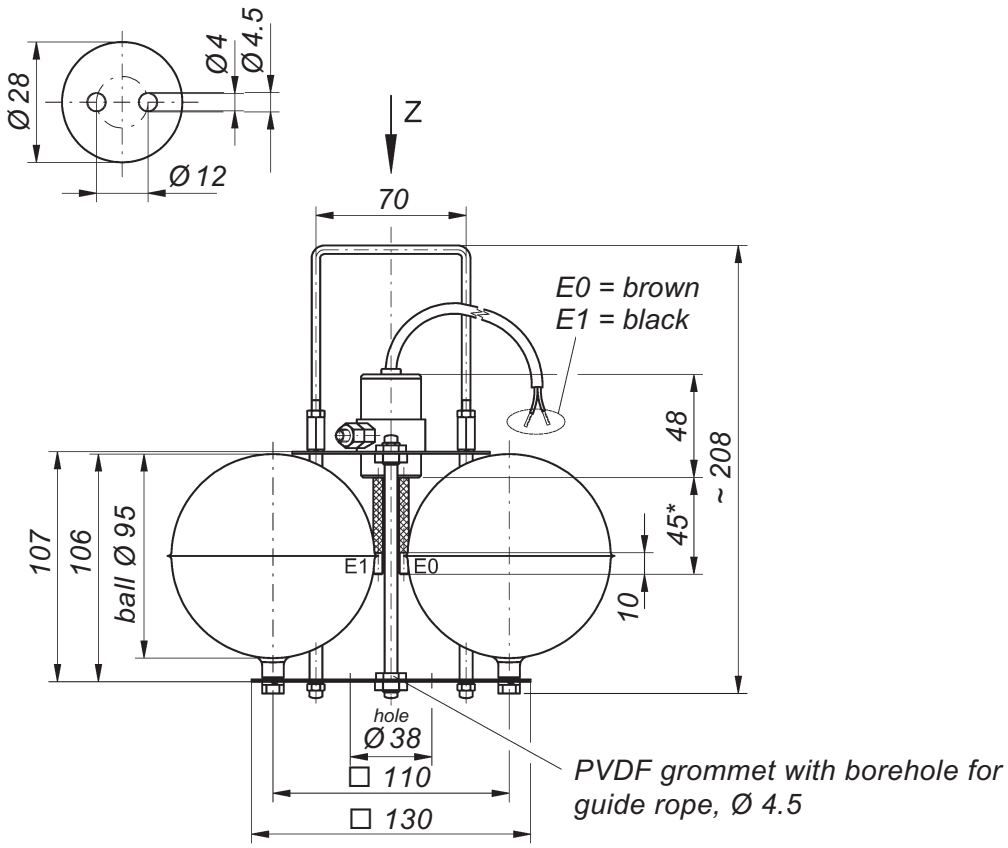

*) other lengths on request

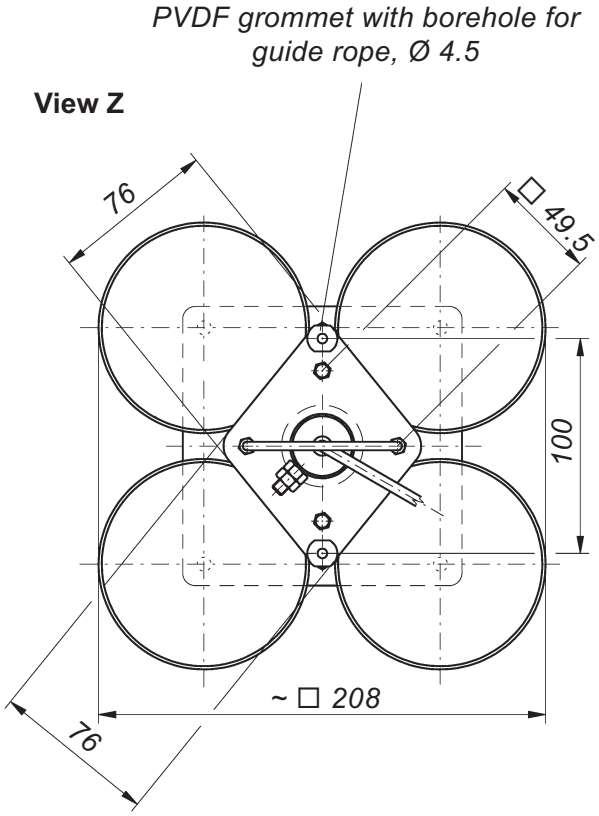

SCHE 2/E

SCHE 3/E floating electrode

conductive electrode with 3 electrodes rods
for signalling 2 alarms
(for connection to 2 electrode relays)

Technical data	SCHE 3/E
Design	2 control electrodes and 1 ground electrode
Sensitive elements	3 detection rods made of stainless steel 316 Ti, 4 mm Ø, covered with shrinkdown tubing made of PVDF or PTFE, length: approx. 45 mm – 95 mm – 95 mm, other lengths on request
Rod electrode head	stainless steel 316 Ti, protection class IP67
Electrical connection	cable made of PTFE, potted in electrode head, length: 2 m, on request: • other cable • other length
Electrode holder, stabilizer plate and brackets	stainless steel 316 Ti or other stainless steel
Floats	4 units made of stainless steel 316 Ti, approx. 95 mm Ø
Min. level of conductive liquid above the floor to ensure functioning of the floating electrode (with d = 1 g/cm³)	90 mm, it is therefore recommended to install the floating electrode in a liquid collection shaft which should be as small as possible
Temperature range	– 20°C to + 90°C
Pressure resistance	for pressureless applications only, use only under atmospheric conditions
Max. length of connecting cable	1,000 between floating electrode and electrode relays

Dimensions (*in mm*)

Bottom view of the rod electrode

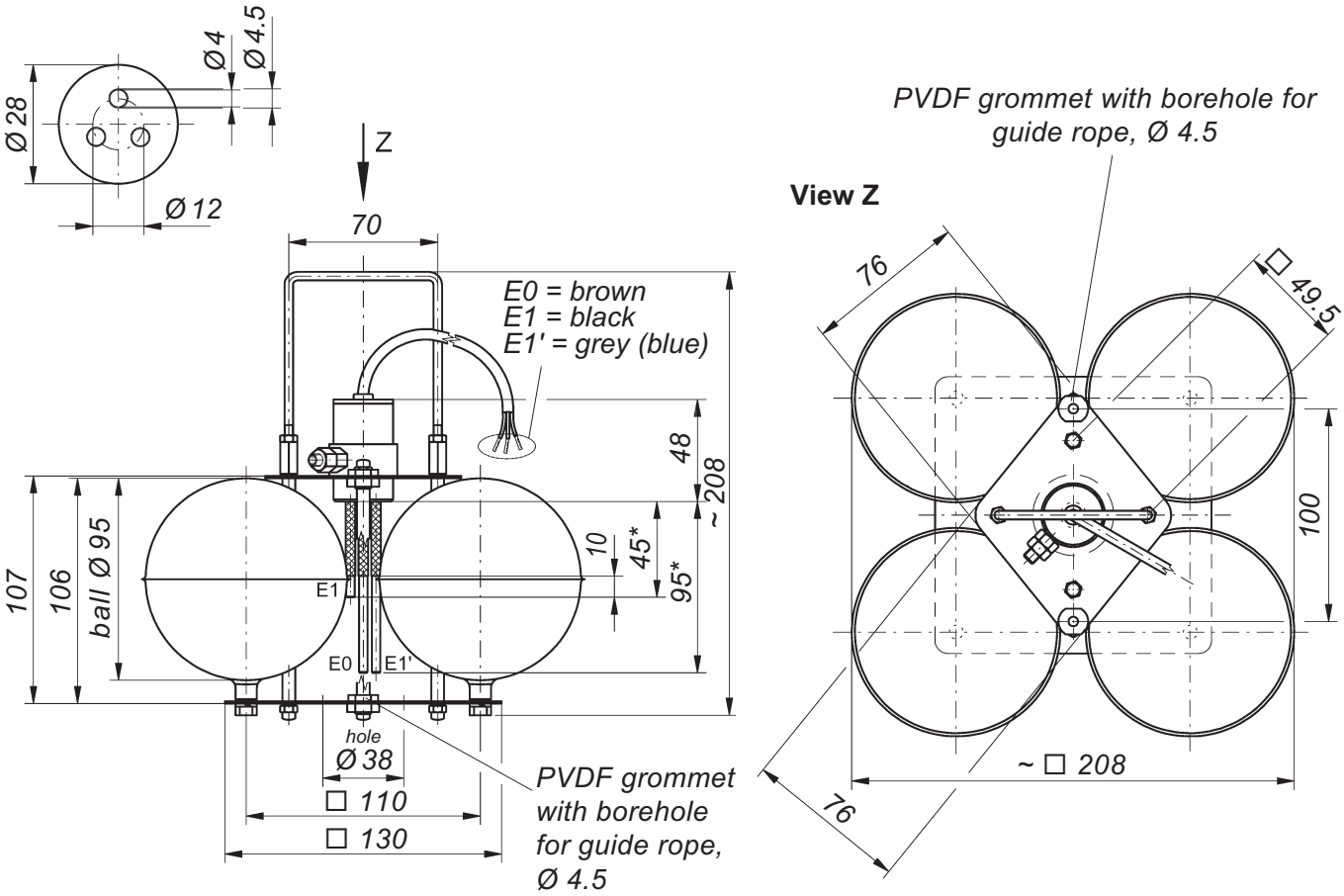

*) other lengths on request

SCHE 3/E

SCHE 2/E (ILS variant) floating electrode

conductive electrode with 2 electrode rods for signalling 1 alarm, with alarm bridging contact for the event that no or insufficient liquid is present to ensure functioning of the floating electrode

Technical data	SCHE 2/E (ILS variant)
Design	1 control electrode and 1 ground electrode
Sensitive elements	2 detection rods made of stainless steel 316 Ti, 4 mm Ø, covered with shrinkdown tubing made of PVDF or PTFE, length: approx. 45 mm, other lengths on request
Rod electrode head	stainless steel 316 Ti, protection class IP67
Electrical connection	cable made of PTFE, potted in electrode head, length: 2 m, on request: • other cable • other length
Electrode holder, stabilizer plate and brackets	stainless steel 316 Ti or other stainless steel
Floats	4 units made of stainless steel 316 Ti, approx. 130 mm Ø
Min. level of conductive liquid above the floor to ensure functioning of the floating electrode (with d = 1 g/cm³)	130 mm, it is therefore recommended to install the floating electrode in a liquid collection shaft which should be as small as possible
Alarm bridging contact to prevent a false alarm in the event of drying out of the liquid collection shaft	reed contact activated via a magnet located in the moving part of the mechanism for the event that no or insufficient liquid is present to ensure floating of the floating electrode and detecting water or oil
Temperature range	– 20°C to + 90°C
Pressure resistance	for pressureless applications only, use only under atmospheric conditions
Max. length of connecting cable	1,000 between floating electrode and electrode relay

SCHE 2/E (ILS variant)

Dimensions (*in mm*)

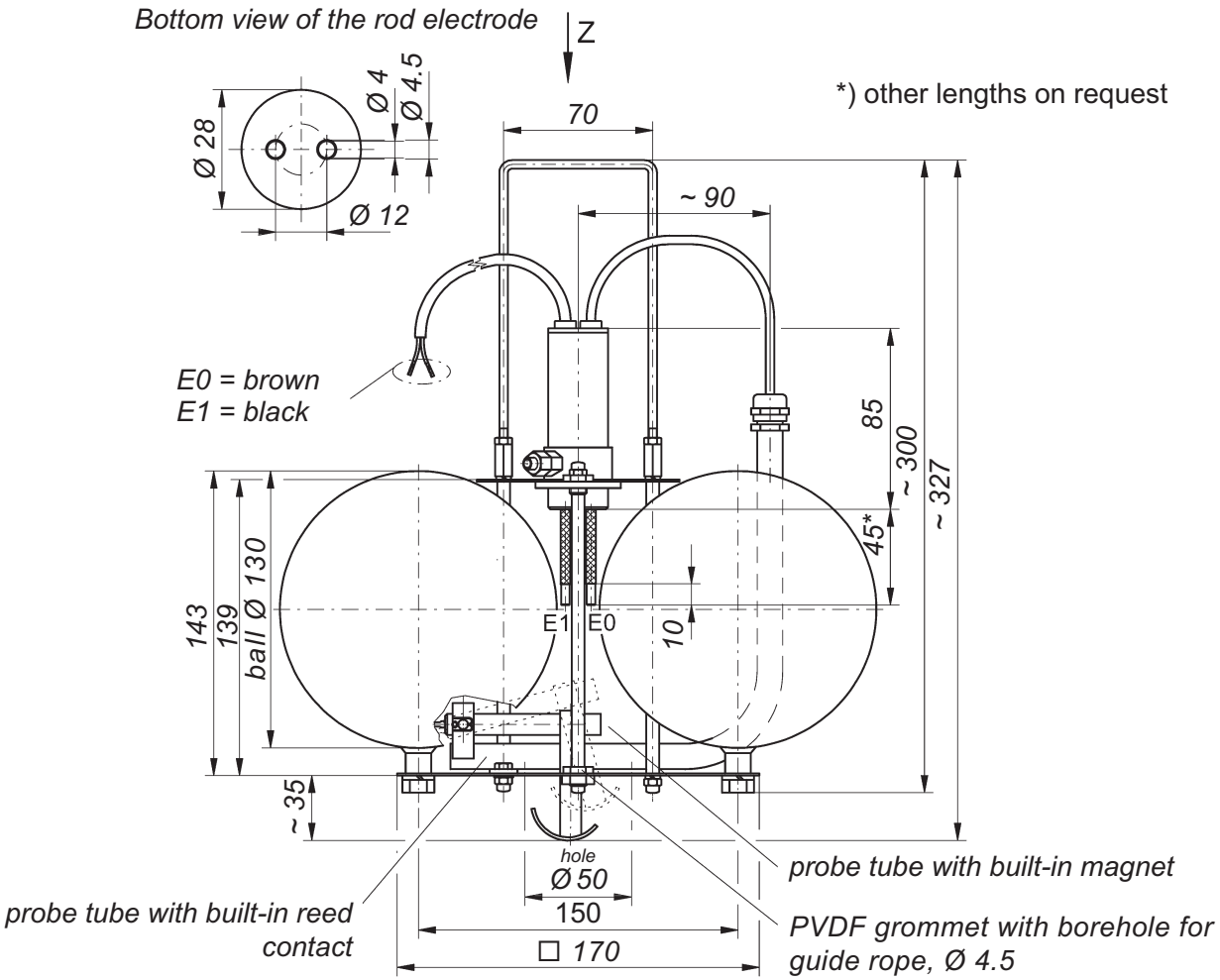

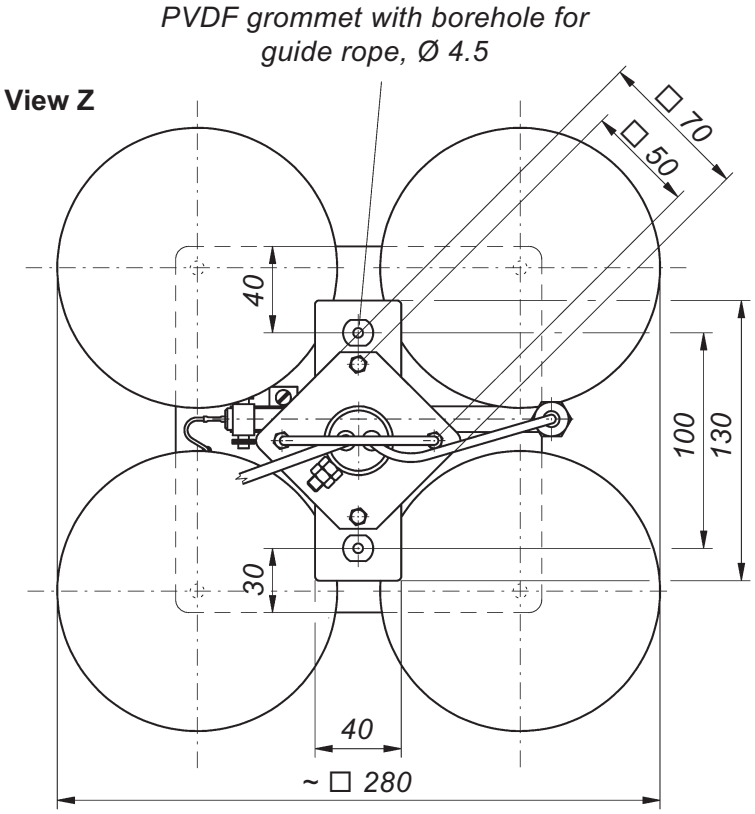

SCHE 2/E (ILS variant)

ESA 2
conductive electrode alarm relay

Conductive electrode alarm relay for DIN rail mounting or fastening via 2 boreholes, with connection terminals on top of housing and with 1 built-in two-colour LED for signalling the respective switching status.

This unit is designed for switch cabinet mounting or installation in a suitable protective housing and may therefore only be mounted / installed in these locations. It is suitable for use in clean environments only.

The design of the electrode alarm relay is based on the **quiescent circuit principle**, in other words, an alarm signal is given if there is no conductive connection between the two electrode rods of the JOLA SCHE ... floating electrode. The two potential-free output contacts of the unit also revert to alarm status if there is a supply voltage failure.

In standby status (unit supplied with voltage and electrode rods in contact with a conductive liquid), the two potential-free NC output contacts are in activated condition (= open) and the two-colour LED lights green.

In the event of an alarm (unit supplied with voltage and electrode rods not in contact with a conductive liquid), the two potential-free NC output contacts are in non activated condition (= closed) and the two-colour LED flashes red.

The output relay 1 can be reset using the built-in acknowledgement button or a connected external acknowledgement button (connection option at terminals 4 and 5) in order to cancel the alarm given via this output. The LED then stops flashing and reverts to permanent red.

Position of output contacts of the ESA 2 conductive electrode alarm relay

ESA 2 without voltage	standby	ESA 2 under voltage alarm	alarm acknowledged
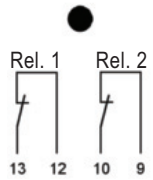	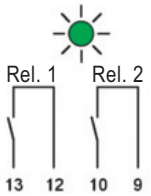	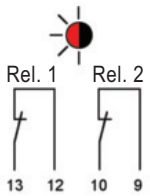	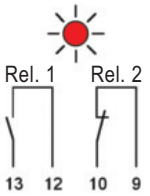
LED dark: both output relays not energized, output contacts closed	**LED lights green:** both output relays energized, output contacts open	**LED flashes red:** both output relays not energized, output contacts closed	**LED lights red:** output relay 1 energized, contact 12, 13 open, output rel. 2 not energized, contact 9, 10 closed

Technical data	ESA 2
Supply voltage (AC versions: terminals 15 and 16; DC versions: • terminal 15: – • terminal 16: +)	AC 230 V, on request: AC 240 V, AC 115 V, AC 24 V, DC 24 V, } only for connection to a low safety voltage DC 12 V } according to the safety regulations relating to the applications or further supply voltages
Power input	approx. 3 VA
Electrode circuit (terminals 7 and 8)	2 terminals (under safety extra low voltage SELV), acting on 2 output relays without self-hold (1 output relay can be reset if an alarm is activated)
No-load voltage	9 V_{eff} ⎍ 10 Hz (safety extra low voltage SELV)
Short-circuit current	max. 0.5 mA_{eff}
Response sensitivity	approx. 30 kΩ or approx. 33 µS (electrical conductance)
Controlled circuits (terminals 12, 13 – Rel. 1, terminals 9, 10 – Rel. 2)	2 potential-free normally closed contacts based on the quiescent current principle, both activated in standby status. One of the two normally closed contacts (terminals 12, 13 – relay 1) can be reset in the event of alarm. The other normally closed contact (terminals 9, 10 – relay 2) retains its switching status as long as the alarm is given.
Acknowledgement	output relay 1 (terminals 12, 13) can be reset via the built-in or via an external acknowledgement button (connection option at terminals 4 and 5)
Switching status indication	via a two-colour LED: green = standby, both output relays energized flashing red = alarm, both output relays not energized lights red = alarm acknowledged, output relay 1 reset
Switching voltage	max. AC 250 V
Switching current	max. AC 4 A
Switching capacity	max. 500 VA
Housing	insulating material, 75 x 55 x 110 mm (dimensions see page 39-1-29)
Connection	terminals on top of housing
Protection class	IP20
Mounting	on 35 mm DIN rail or fastening via two boreholes
Mounting orientation	any
Temperature range	– 20°C to + 60°C
Max. length of connecting cable	1,000 m between electrode alarm relay and floating electrode
EMC	• for interference emission in accordance with the appliance-specific requirements for households, business and commerce as well as small companies • for interference immunity in accordance with the appliance-specific requirements for industrial companies

Circuit diagram for connection of floating electrode SCHE 2/T/GR, SCHE 2/T/KL, SCHE 2/E or SCHE 2/E (ILS variant) to electrode alarm relay ESA 2

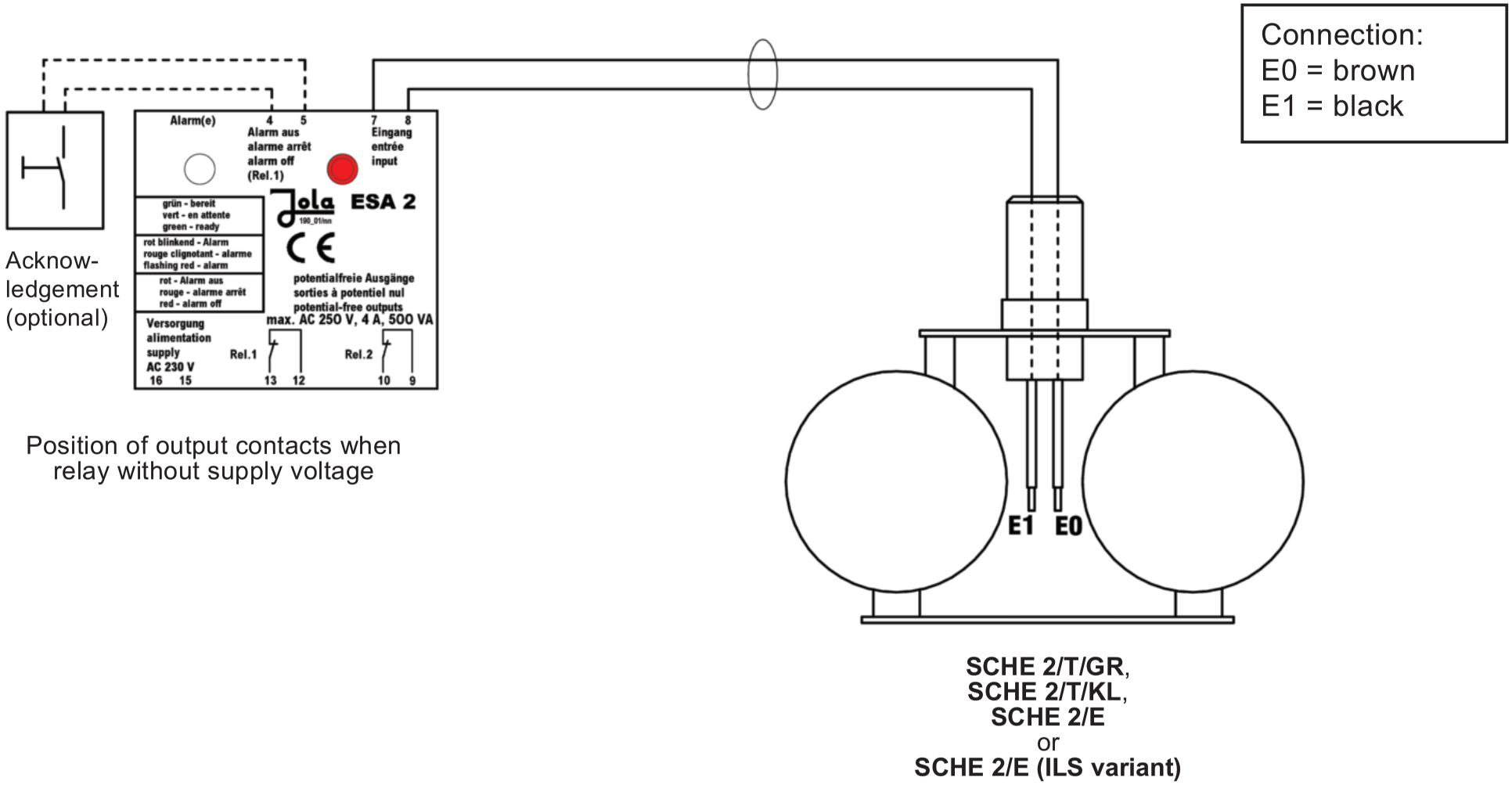

Position of output contacts when relay without supply voltage

SCHE 2/T/GR,
SCHE 2/T/KL,
SCHE 2/E
or
SCHE 2/E (ILS variant)

Circuit diagram for connection of floating electrode SCHE 3/E to 2 electrode alarm relays ESA 2

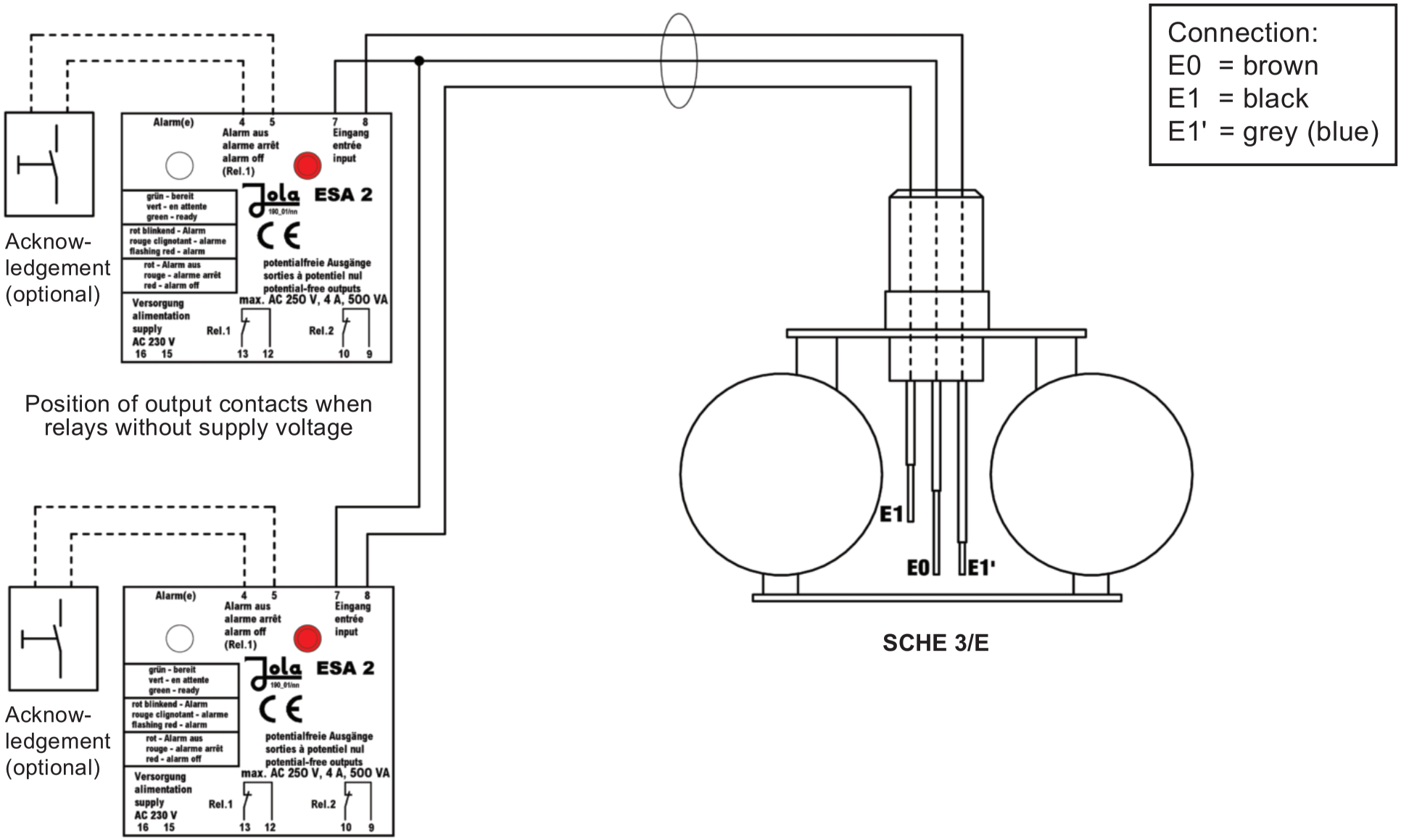

ESA 2/G
conductive electrode alarm relay

Conductive electrode alarm relay in surface-mount housing, with transparent cover and with 2 LEDs for signalling the respective switching status, inside the housing

The design of the electrode alarm relay is based **on the quiescent circuit principle**, in other words, an alarm signal is given if there is no conductive connection between the two electrode rods of the Jola SCHE … floating electrode. The two potential-free output contacts of the unit also revert to alarm status if there is a supply voltage failure.

In standby status (unit supplied with voltage and electrode rods in contact with a conductive liquid), the two potential-free changeover output contacts are in activated condition and the two-colour LED lights green.

In the event of an alarm (unit supplied with voltage and electrode rods not in contact with a conductive liquid), the two potential-free changeover output contacts are in non activated condition (contacts in quiescent state), and the two-colour LED flashes red. An additional red flashing LED also flashes as a switching status indicator for the output relay which can be acknowledged.

The output relay 1 (terminals 3, 4, 5) can be reset using a connected external acknowledgement button (connection option at terminals 9 and 10) in order to cancel the alarm given via this output. The red flashing LED then stops flashing and the two-colour LED reverts to permanent red.

Position of output contacts of the ESA 2/G conductive electrode alarm relay

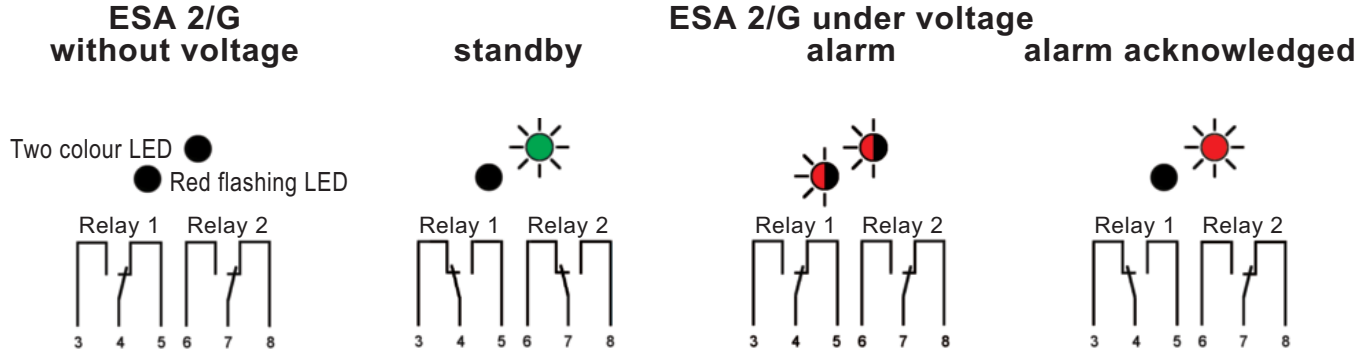

ESA 2/G without voltage	ESA 2/G under voltage: standby	ESA 2/G under voltage: alarm	ESA 2/G under voltage: alarm acknowledged
LEDs dark:	**Two-colour LED lights green, red flashing LED dark:**	**Two-colour LED flashes red, red flashing LED flashes:**	**Two-colour LED lights red, red flashing LED dark:**
both output relays not energized	both output relays energized	both output relays not energized	output relay 1 energized, output rel. 2 not energized

Technical data	ESA 2/G
Supply voltage (AC versions: terminals 1 and 2; DC versions: • terminal 1: – • terminal 2: +)	AC 230 V, on request: AC 240 V, AC 115 V, AC 24 V, DC 24 V, } only for connection to a low safety voltage DC 12 V } according to the safety regulations relating to the applications or further supply voltages
Power input	approx. 3 VA
Electrode circuit (terminals 11 and 12)	2 terminals (under safety extra low voltage SELV), acting on 2 output relays without self-hold (1 output relay can be reset if an alarm is activated)
No-load voltage	9 V_{eff} ⎍ 10 Hz (safety extra low voltage SELV)
Short-circuit current	max. 0.5 mA_{eff}
Response sensitivity	approx. 30 kΩ or approx. 33 µS (electrical conductance)
Controlled circuits (terminals 3 to 8)	2 potential-free changeover contacts based on the quiescent current principle, both activated in standby status. One of the two changeover contacts (terminals 3, 4, 5 – relay 1) can be reset in the event of alarm. The other changeover contact (terminals 6, 7, 8 – relay 2) retains its switching status as long as the alarm is given.
Acknowledgement	output relay 1 (terminals 3, 4, 5) can be reset via an external acknowledgement button (connection option at terminals 9 and 10)
Switching status indication	• via a two-colour LED: green = standby, both output relays energized flashing red = alarm, both output relays not energized lights red = alarm acknowledged, output relay 1 reset • and a red flashing LED: flashes red = output relay 1 in alarm status
Switching voltage	max. AC 250 V
Switching current	max. AC 4 A
Switching capacity	max. 500 VA
Housing	insulating material, with 3 cable entries (dimensions see page 39-1-29)
Connection	internal terminals
Protection class	IP54
Mounting	surface mounting using 4 screws
Mounting orientation	any
Temperature range	– 20°C to + 60°C
Max. length of connecting cable	1,000 m between electrode alarm relay and floating electrode
EMC	• for interference emission in accordance with the appliance-specific requirements for households, business and commerce as well as small companies • for interference immunity in accordance with the appliance-specific requirements for industrial companies

Circuit diagram for connection of floating electrode SCHE 2/T/GR, SCHE 2/T/KL, SCHE 2/E or SCHE 2/E (ILS variant) to electrode alarm relay ESA 2/G

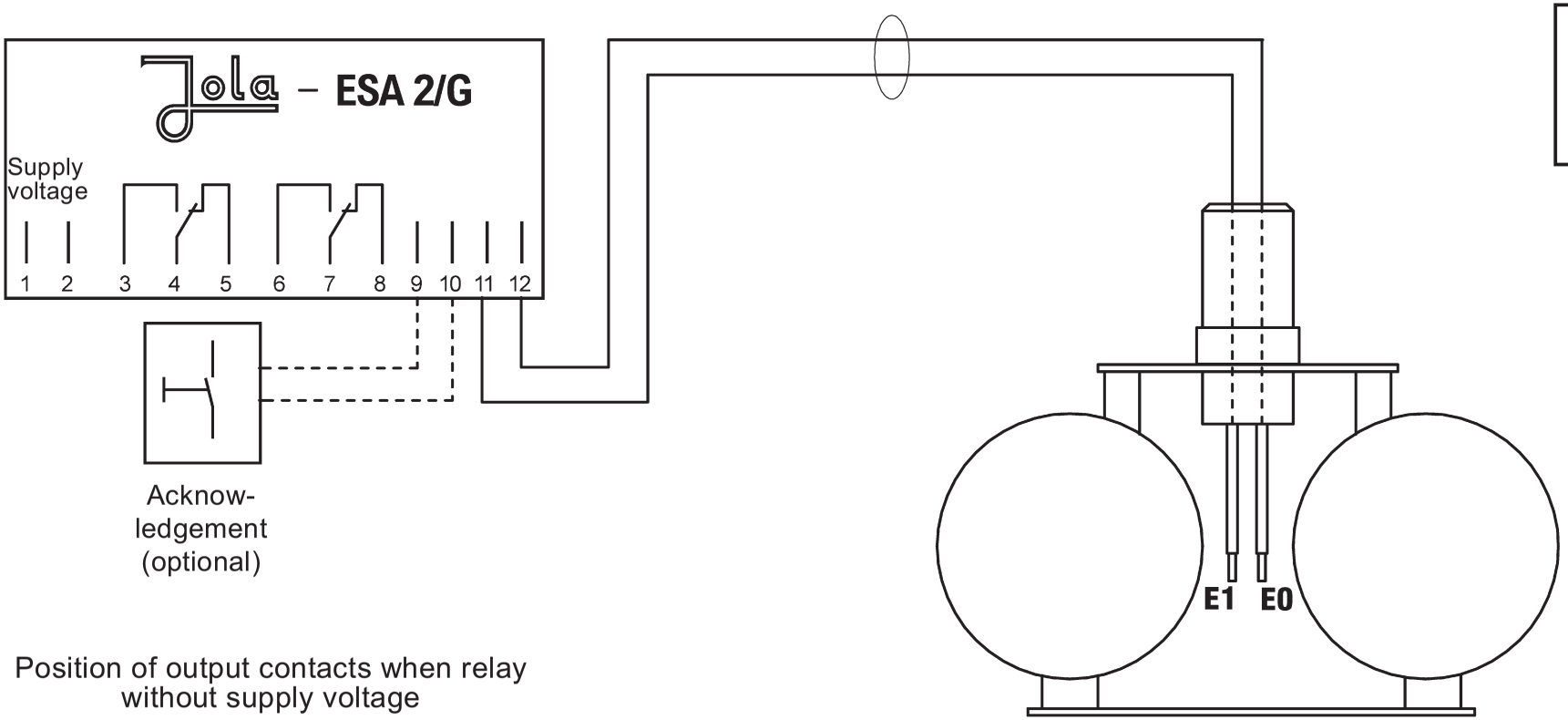

Connection:
E0 = brown
E1 = black

Position of output contacts when relay without supply voltage

SCHE 2/T/GR,
SCHE 2/T/KL,
SCHE 2/E
or
SCHE 2/E (ILS variant)

Circuit diagram for connection of floating electrode SCHE 3/E to 2 electrode alarm relays ESA 2/G

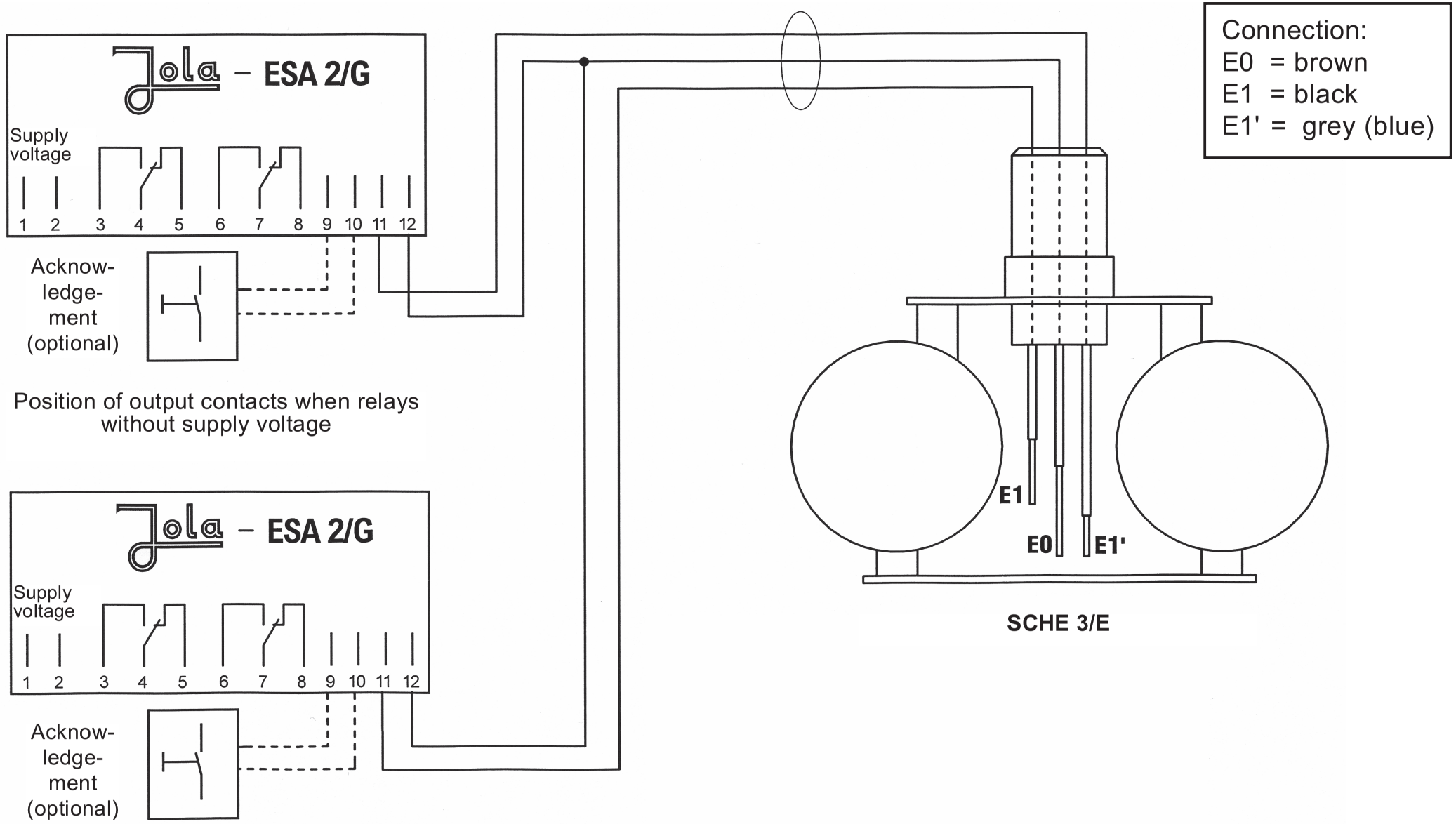

NR 3 A conductive electrode relay

Conductive electrode relay for DIN rail mounting, with connection terminals on top of housing and with 2 built-in LEDs for signalling the respective switching status.

The unit is designed for switch cabinet mounting or installation in a suitable protective housing and may therefore only be mounted/installed in these locations. It is suitable for use in clean environments only.

The design of the electrode relay is based **on the quiescent circuit principle**; in other words, an alarm signal is given if there is no conductive connection between the two electrode rods of the JOLA SCHE ... floating electrode. The output contact of the unit also reverts to alarm status if there is a supply voltage failure.

In standby status (unit supplied with voltage and electrode rods in contact with a conductive liquid), the potential-free changeover output contact is in activated condition and the green LED lights.

In the event of an alarm (unit supplied with voltage and electrode rods not in contact with a conductive liquid), the potential-free changeover output contact is in non activated condition (quiescent state) and the red LED lights.

Position of output contacts of the NR 3 A conductive electrode relay

NR 3 A without voltage	NR 3 A under voltage standby	NR 3 A under voltage alarm acknowledged
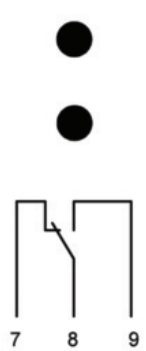	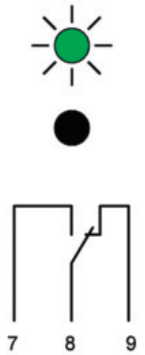	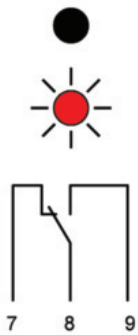
LEDs dark: output relay not energized	**green LED lights, red LED dark:** output relay energized	**green LED dark, red LED lights:** output relay not energized

Technical data	NR 3 A
Supply voltage (AC versions: terminals 10 and 12; DC versions: • terminal 10: – • terminal 12: +)	AC 230 V, on request: AC 240 V, AC 115 V, AC 24 V, DC 24 V, } only for connection to a low safety voltage DC 12 V } according to the safety regulations relating to the application or further supply voltages
Power input	approx. 3 VA
Electrode circuit (terminals 4 and 6)	2 terminals (under safety extra low voltage SELV), acting on 1 output relay
No-load voltage	9 V_{eff} ⊓⊔ 10 Hz (safety extra low voltage SELV)
Short-circuit current	max. 0.5 mA_{eff}
Response sensitivity	approx. 30 kΩ or approx. 33 µS (conductance)
Controlled circuit (terminals 7, 8, 9)	1 single-pole potential-free changeover contact with self-hold based on the quiescent current principle, activated in standby status
Switching status indication	• via a green LED: lights = standby, output relay energized • via a red LED: lights = alarm, output relay not energized
Switching voltage	max. AC 250 V
Switching current	max. AC 4 A
Switching capacity	max. 500 VA
Housing	insulating material, 75 x 22.5 x 100 mm (dimensions see page 39-1-29)
Connection	terminals on top of housing
Protection class	IP20
Mounting	on 35 mm DIN rail
Mounting orientation	any
Temperature range	– 20°C to + 60°C
Max. length of connecting cable	1,000 m between electrode alarm relay and floating electrode
EMC	• for interference emission in accordance with the appliance-specific requirements for households, business and commerce as well as small companies • for interference immunity in accordance with the appliance-specific requirements for industrial companies

Circuit diagram for connection of floating electrode SCHE 2/T/GR, SCHE 2/T/KL, SCHE 2/E or SCHE 2/E (ILS variant) to electrode relay NR 3 A

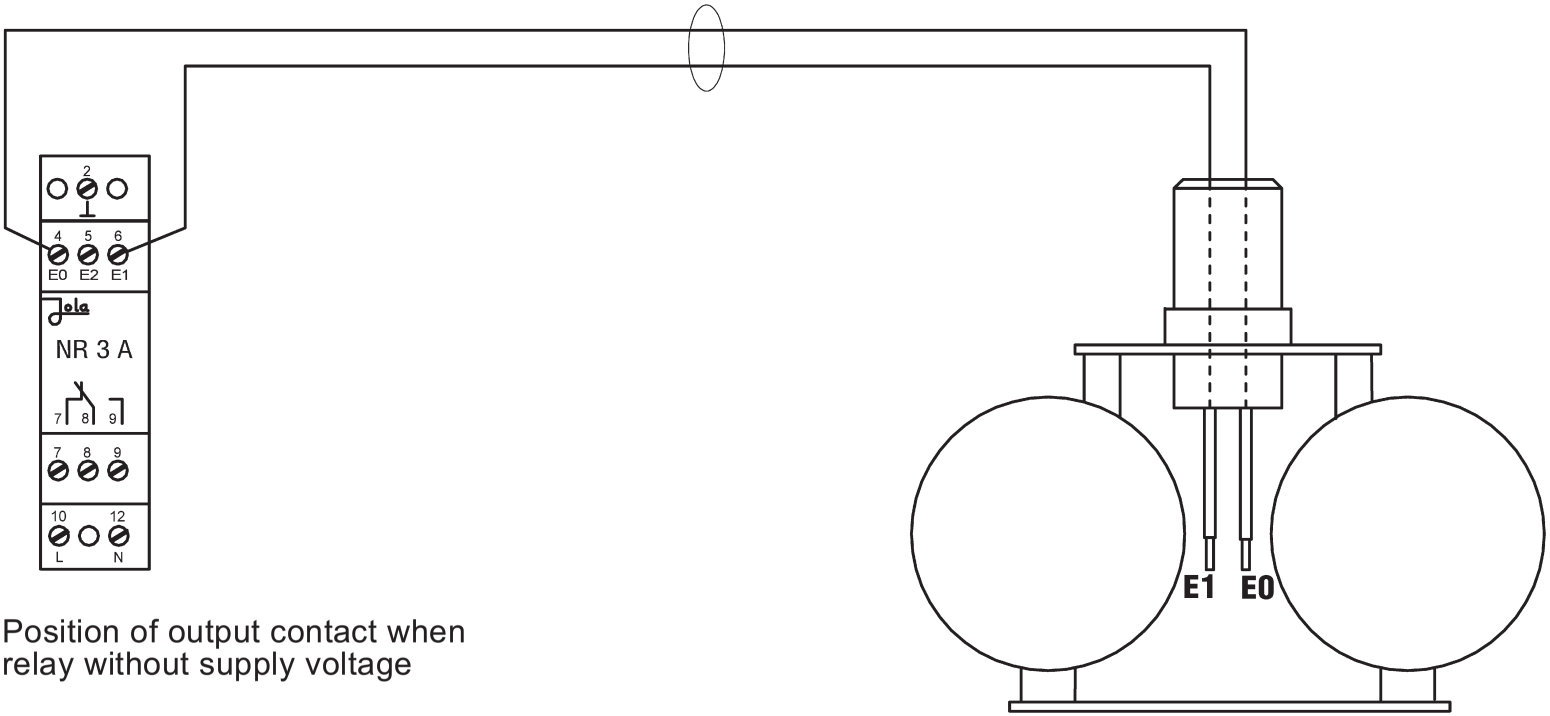

Position of output contact when relay without supply voltage

SCHE 2/T/GR,
SCHE 2/T/KL,
SCHE 2/E
or
SCHE 2/E (ILS variant)

Connection:
E0 = brown
E1 = black

Circuit diagram for connection of floating electrode SCHE 3/E to 2 electrode relays NR 3 A

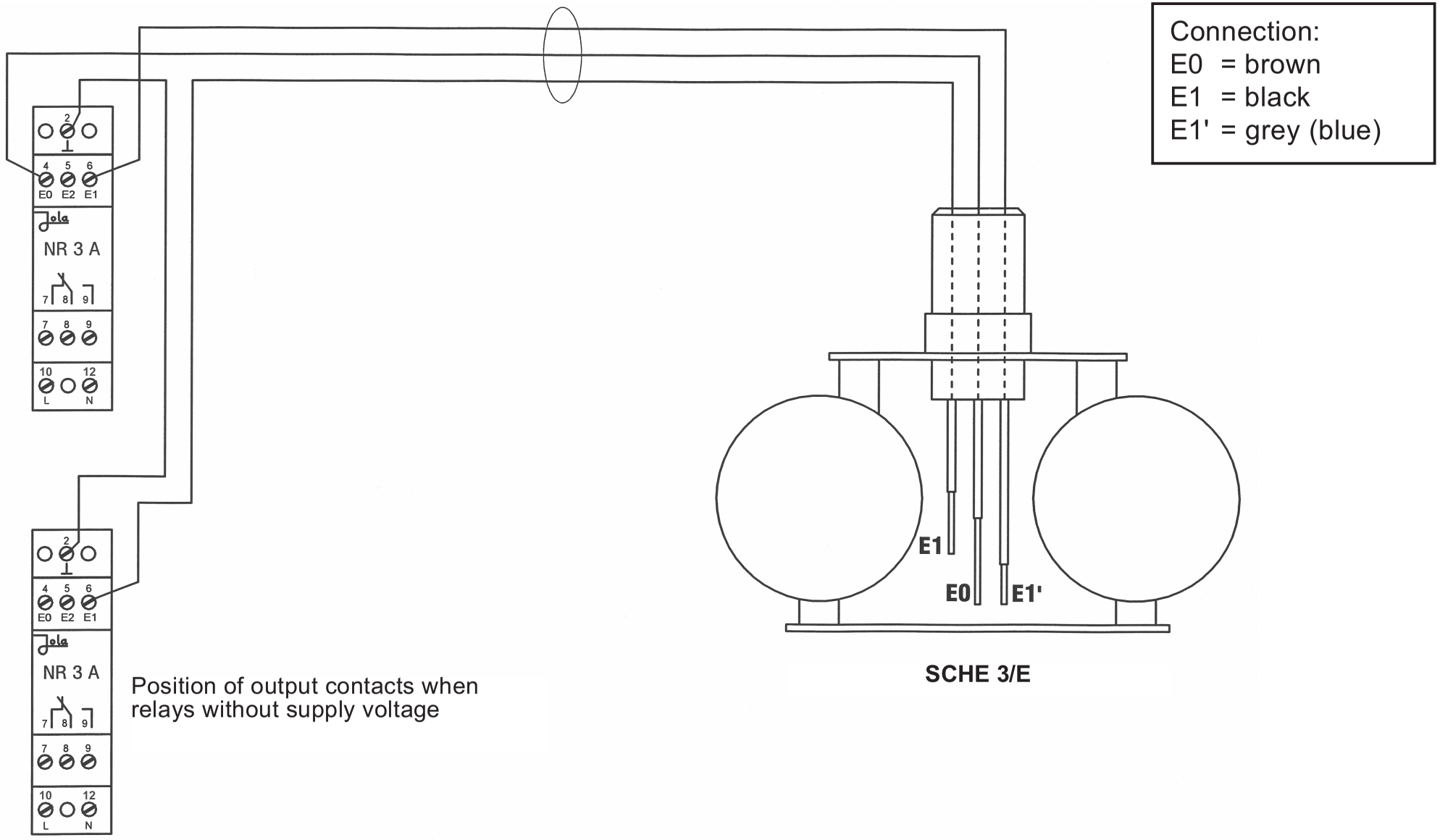

Dimensions (*in mm*)

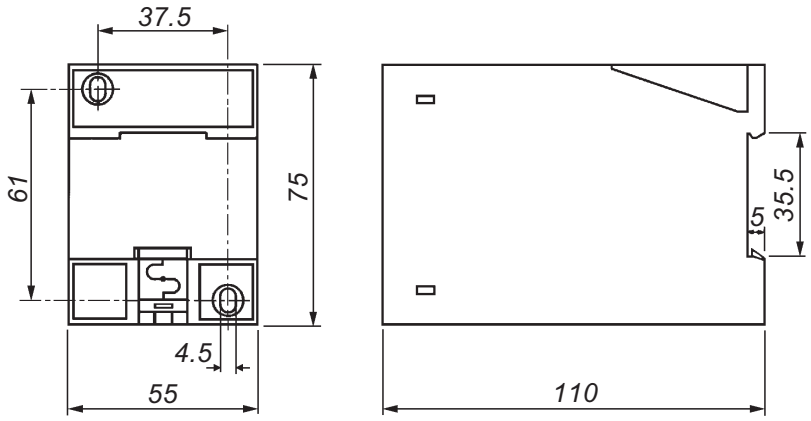

ESA 2

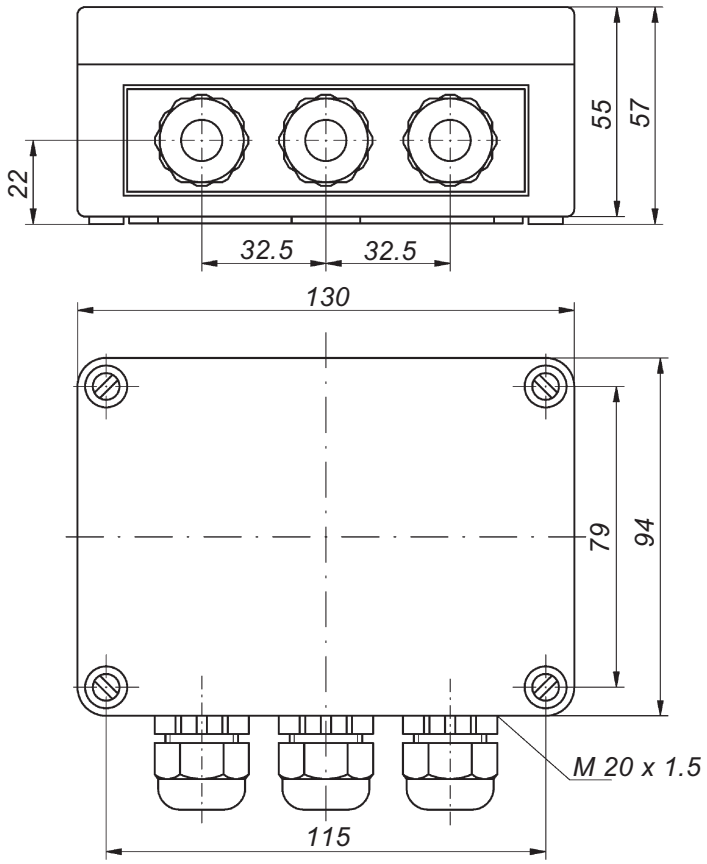

ESA 2/G

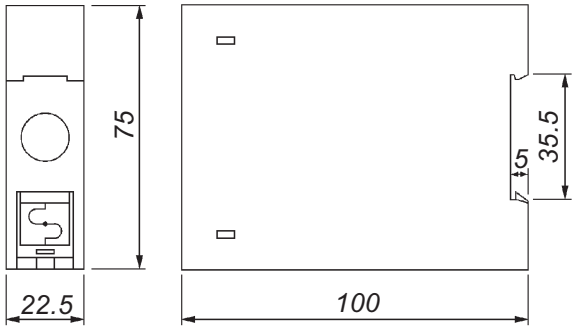

NR 3 A

Mounting frame for floating electrodes

It is always advisable to use a Jola mounting frame for floating electrodes for the following reasons:

- When they rise and fall, the floating electrodes must not be allowed to come into contact with any object in the surrounding installation.
- The floating electrodes must not float about in an uncontrolled fashion, as this could impair proper functioning.

The Jola mounting frame for floating electrodes is fitted with 2 guide ropes and an impact plate to prevent the falling floating electrode from getting stuck when touching down.

Technical data	Mounting frame
Frame	stainless steel 316 Ti
Fixing screws	stainless steel 316 Ti
Guide ropes	stainless steel 316
Impact plate	PP
Height	acc. to customer specifications, however max. 6 m
Option	mounting frame in 2 sections, max. admissible height: 6 m

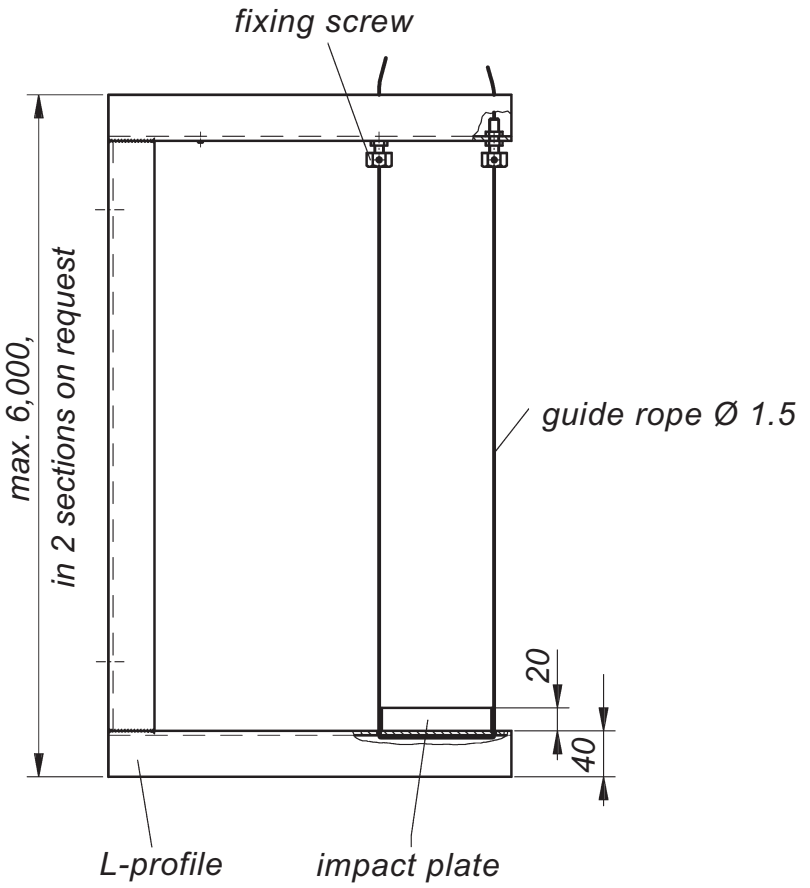

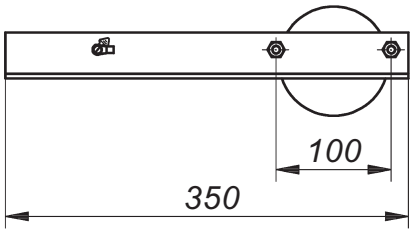

Dimensions in mm

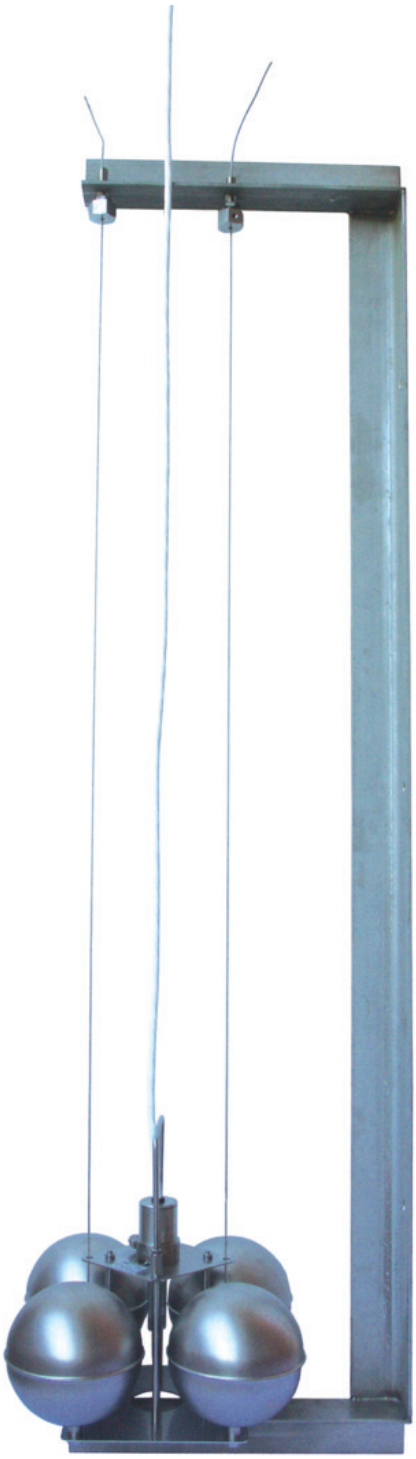

Mounting frame with SCHE 2/E floating electrode

Optional supplementary float for floating electrodes

To assure the proper functioning of the floating electrodes, **when they are used in deep pits with a significant differential between the highest and the lowest liquid level**, we recommend the use of a supplementary float which has to be fixed to the connecting cable of each electrode.

The float will then carry the weight of the electrode connecting cable and this will prevent the electrode from leaning sideways or turning over when the liquid level is high.

Application example

Floating electrode installed in a mounting frame and equipped with a supplementary float

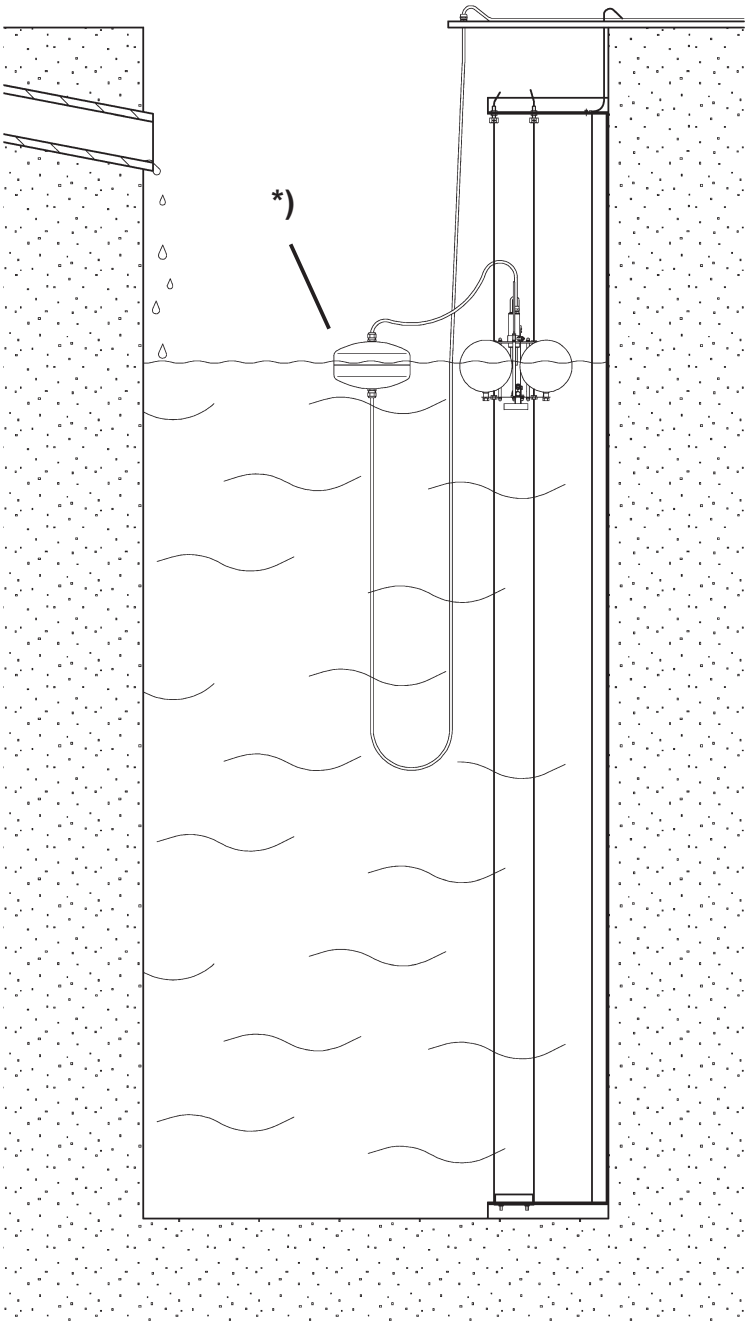

***) supplementary float,**
Ø approx. 165 mm x approx. 120 mm, made of stainless steel 316 Ti or
Ø approx. 190 mm x approx. 120 mm, made of PP